THOMSON CONSUMER ELECTRONICS

Service

NORDMENDE THOMSON TECHNOLOGY SABA TELEFUNKEN THOMSON

RUNDFUNK
RADIO
RADIO

Bestell-Nr. 101.511.70

Compact 2500 CD

ACHTUNG! Ersatzteilbestellungen
sind schneller und kostengünstiger über
Fax 0511/418-1260

Stromlaufplan – Lagepläne – Service-Einstellungen – Ersatzteile
Schematic Diagram – Component Layouts – Service Adjustments – Spare Parts
Schéma – Plan de localisation – Réglages de service – Pièces de rechange

Technische Daten / Technical data / Caractéristiques principales

EMPFANGSTEIL / RADIO / RADIO

UKW ..... : 87,5 - 108 MHz
MW ..... : 522 - 1710 kHz
LW ..... : 150 - 283 kHz

VERSTÄRKER / AMPLIFIER PART / PARTIE AMPLIFICATEUR

Ausgangsleistung / output power / puissance de sortie
(Musik / music / musique) ..... : 2 x 20 W
(Spitze / peak / crête) ..... : 2 x 40 W
Impedanz / Impedance / Impedance ..... : 4Ω

CASSETTENTEIL / CASSETTE PART / PARTIE MAGNETOPHONE

Bandsorten / tape select / types de bande..... : Fe, CrO_2, Me
Bandgeschwindigkeit / tape speed / vitesse de défilement de la bande ..... : 4,75 cm/s

CD-SPIELER / CD-PLAYER / LECTEUR-CD

Samplingfrequenz / sampling frequency..... : 44,1 kHz
Übertragungsbereich / frequency response / coube de résponse ..... : 20 Hz - 20 kHz

VERSCHIEDENES / DIVERSE / DIVERS

Netzteil / main / alimentation ..... : 220 - 230 V ~ 50 Hz
Abmessungen (B x H x T) / dimensions (W x H x D) / dimensions (L x H x P) ..... : 355 x 390 x 405
Gewicht / weight / poids ..... : 7,7 kg

Änderungen vorbehalten
Subject to modifications
Modifications réservées

4094

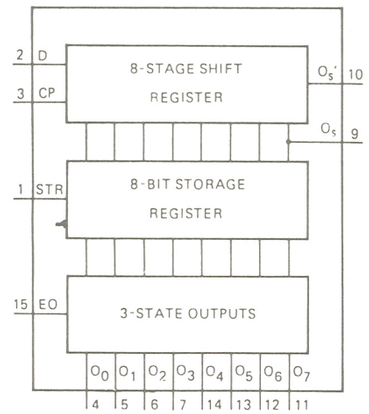

4053

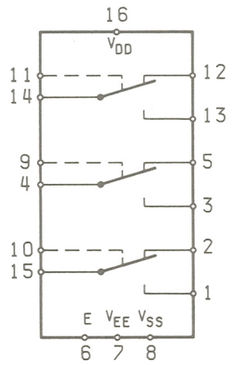

LM 7001

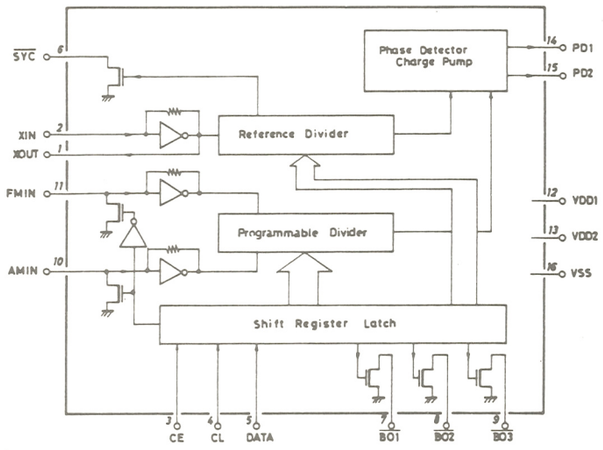

MC 4558 S

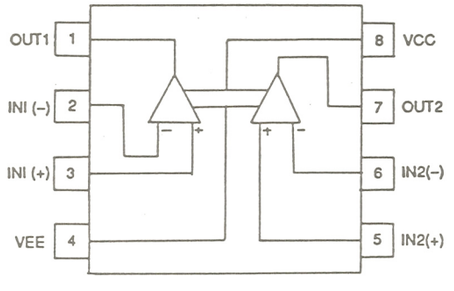

Hauptleiterplatte · Mainboard · Platine principale

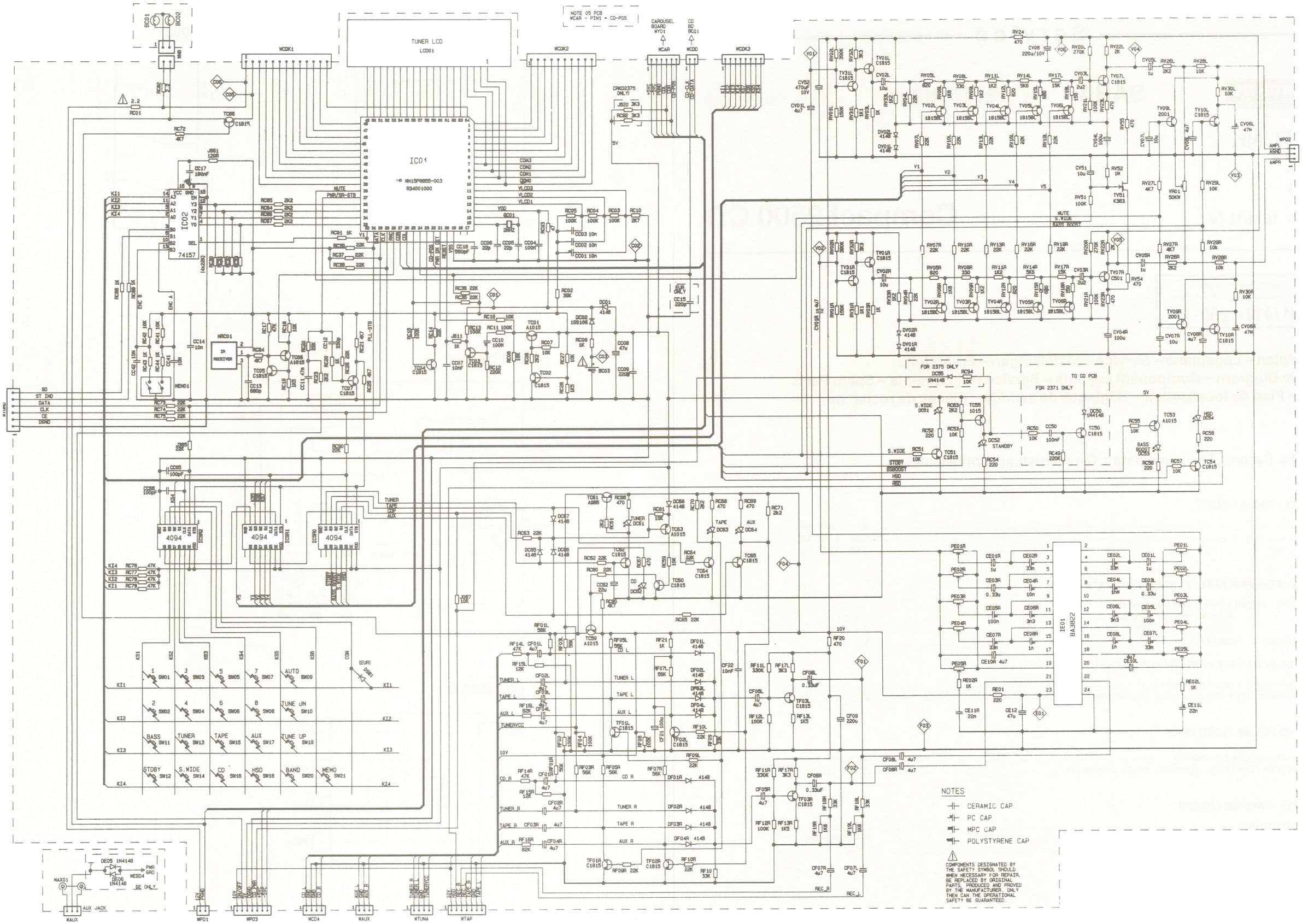

Hauptleiterplatte · Mainboard · Platine principale

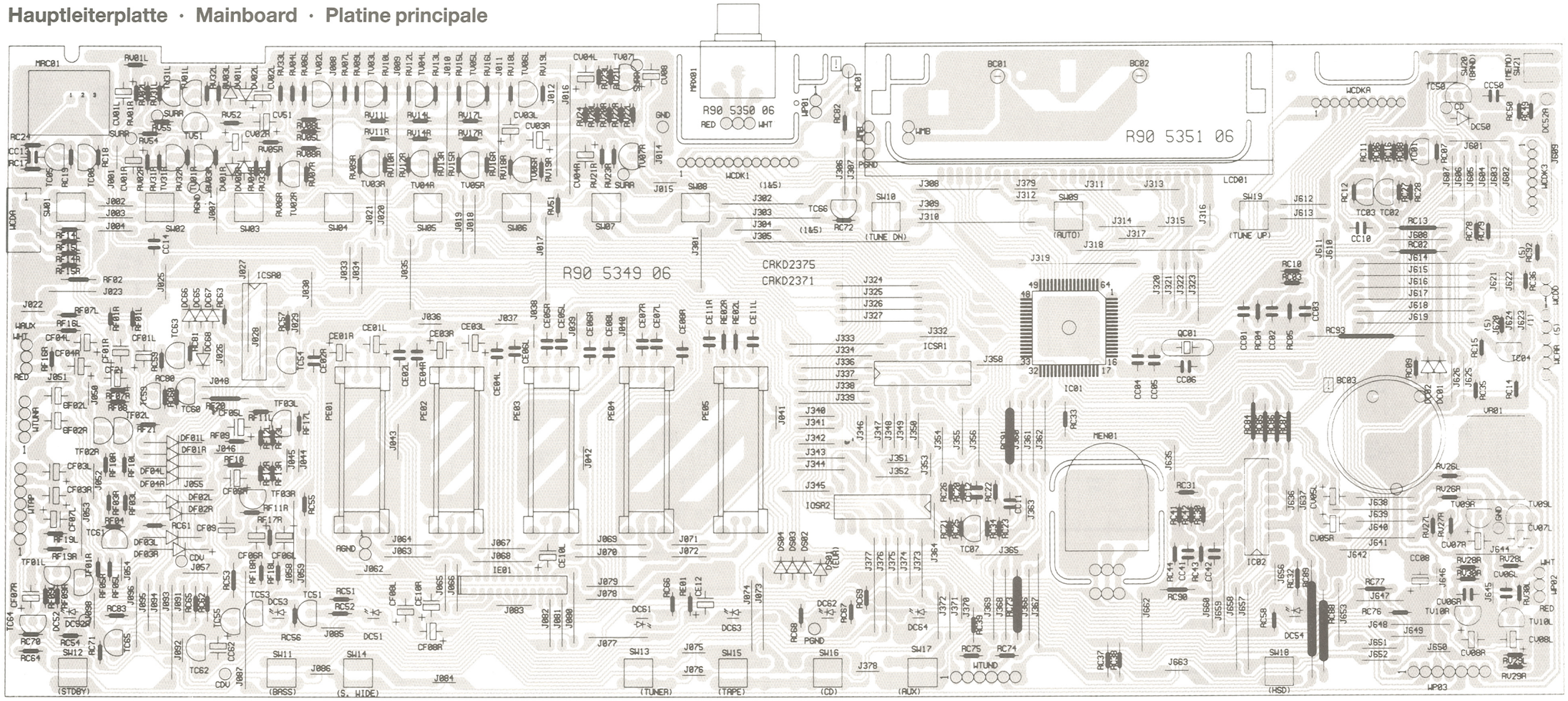

Netzteil, Kopfhörer · Power, Headphone · Bloc de alimentation, casque

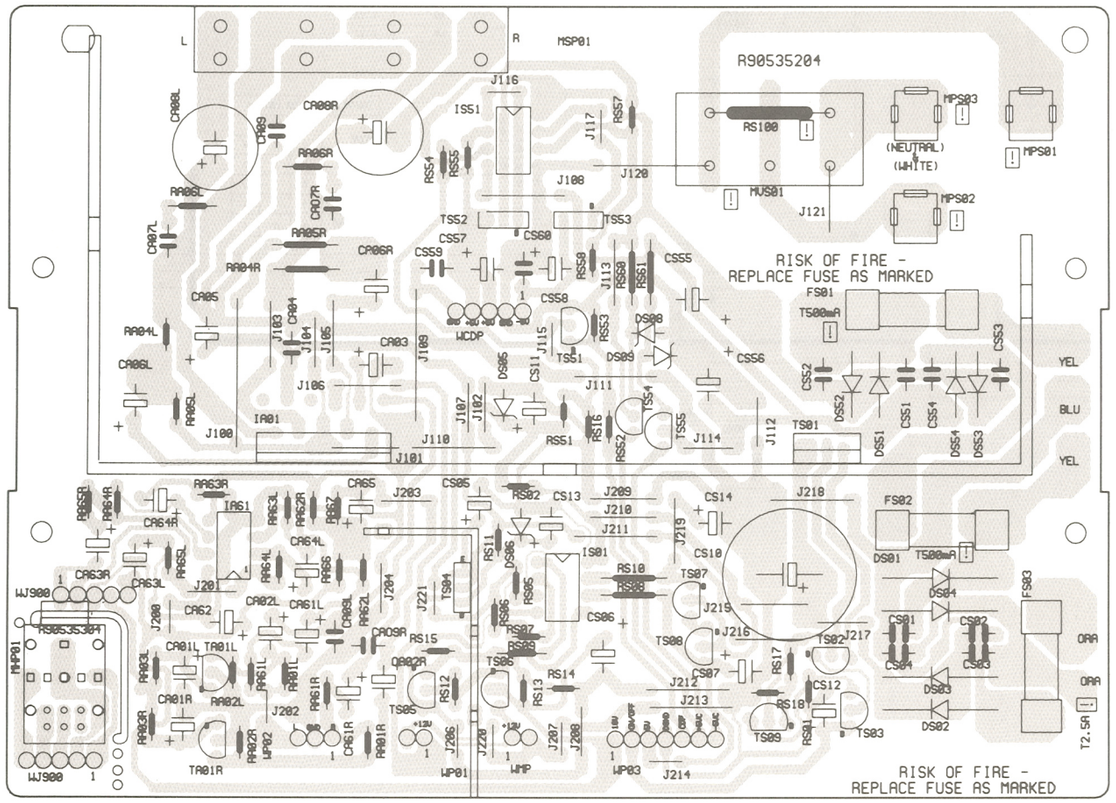

Tuner

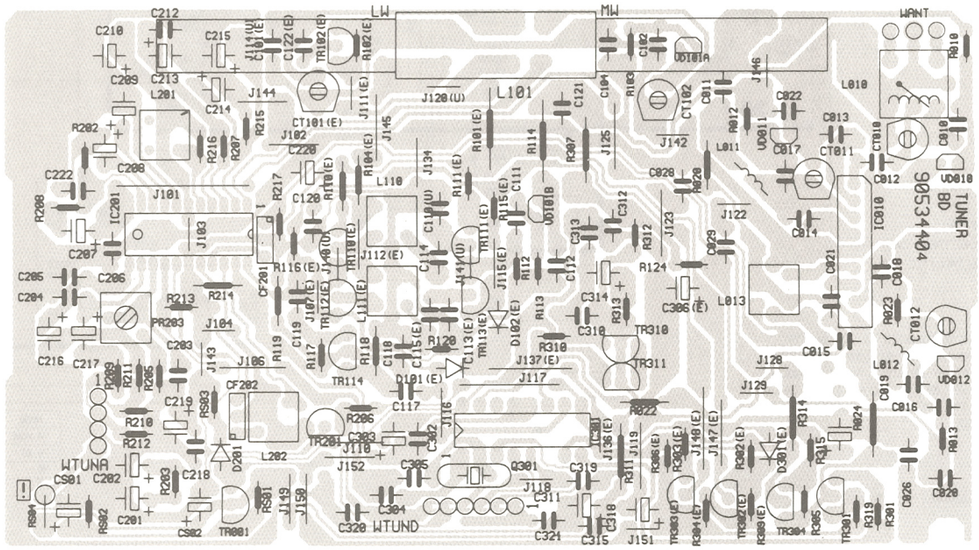

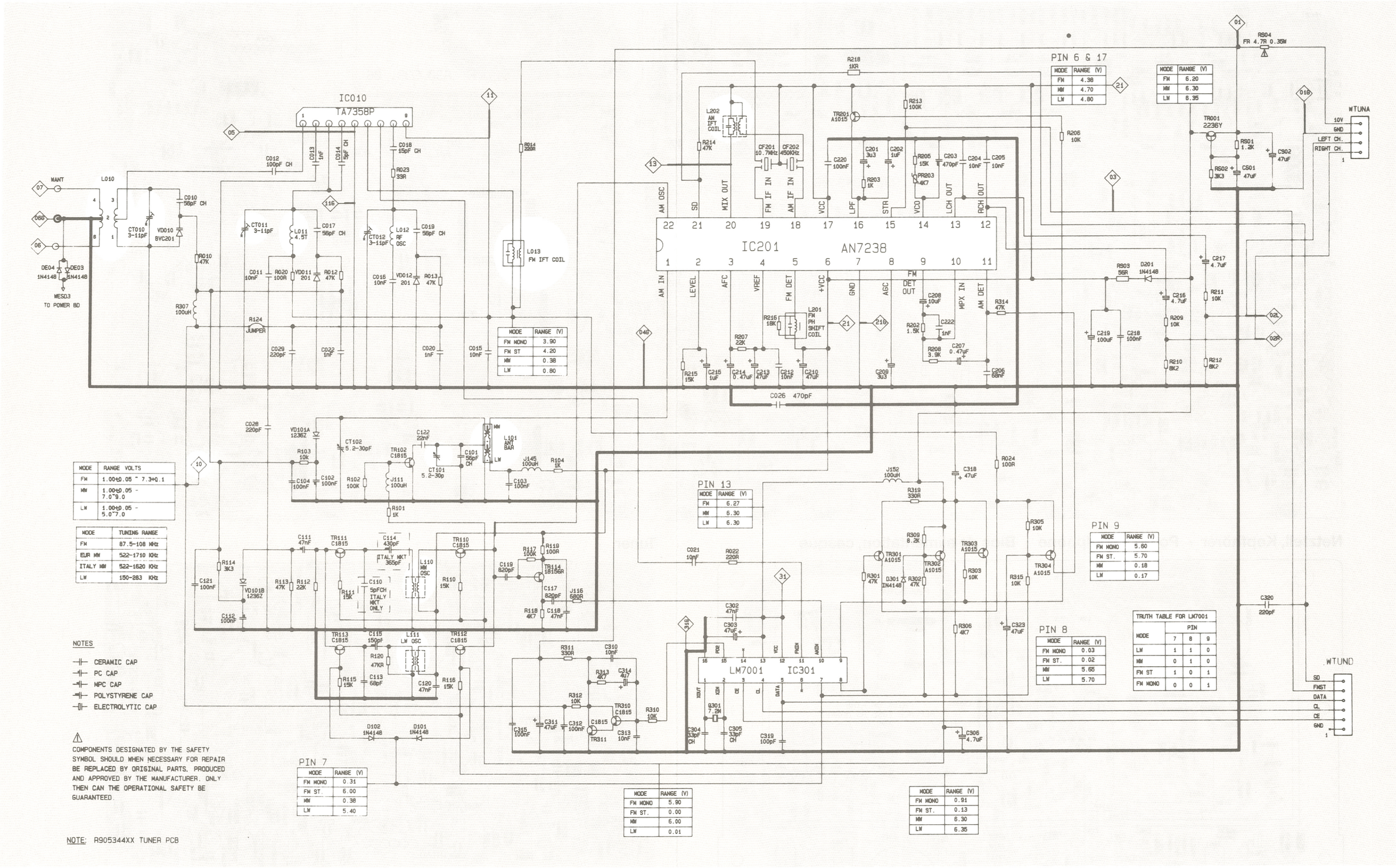

PIN 6 & 17

MODE	RANGE (V)
FM	4.38
MW	4.70
LW	4.80

MODE	RANGE (V)
FM	6.20
MW	6.30
LW	6.35

MODE	RANGE (V)
FM MONO	3.90
FM ST	4.20
MW	0.38
LW	0.80

MODE	RANGE VOLTS
FM	1.00±0.05 ~ 7.3+0.1
MW	1.00±0.05 - 7.0~9.0
LW	1.00±0.05 - 5.0~7.0

MODE	TUNING RANGE
FM	87.5-108 MHz
EUR MW	522-1710 KHz
ITALY MW	522-1620 KHz
LW	150-283 KHz

PIN 13

MODE	RANGE (V)
FM	6.27
MW	6.30
LW	6.30

PIN 9

MODE	RANGE (V)
FM MONO	5.60
FM ST.	5.70
MW	0.18
LW	0.17

PIN 8

MODE	RANGE (V)
FM MONO	0.03
FM ST.	0.02
MW	5.65
LW	5.70

TRUTH TABLE FOR LM7001

MODE	PIN		
	7	8	9
LW	1	1	0
MW	0	1	0
FM ST	1	0	1
FM MONO	0	0	1

PIN 7

MODE	RANGE (V)
FM MONO	0.31
FM ST.	6.00
MW	0.38
LW	5.40

MODE	RANGE (V)
FM MONO	5.90
FM ST.	0.00
MW	6.00
LW	0.01

MODE	RANGE (V)
FM MONO	0.91
FM ST.	0.13
MW	6.30
LW	6.35

Verstärker, Netzteil · Amplifier, Power supply · Amplificateur, Bloc d'alimentation

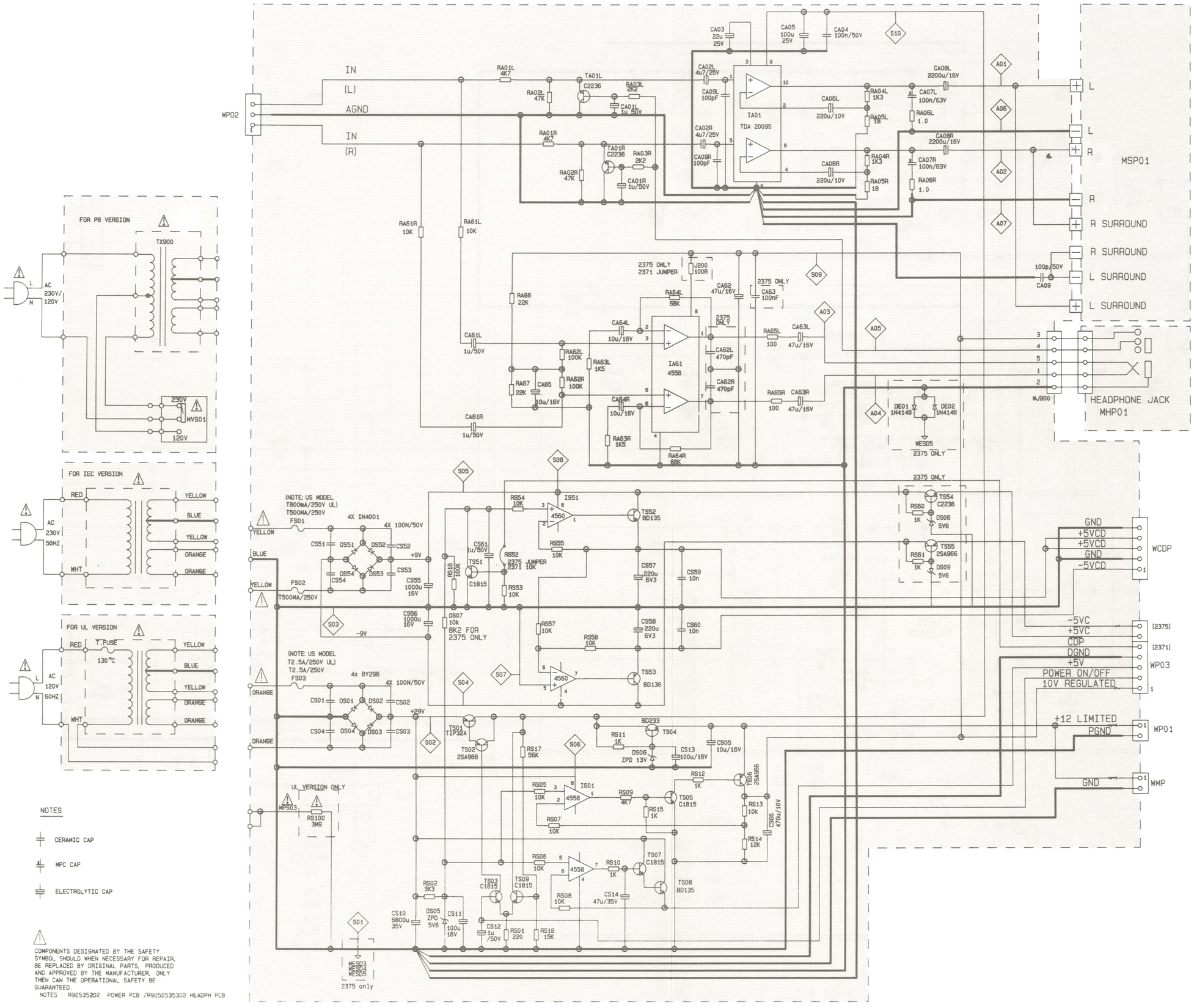

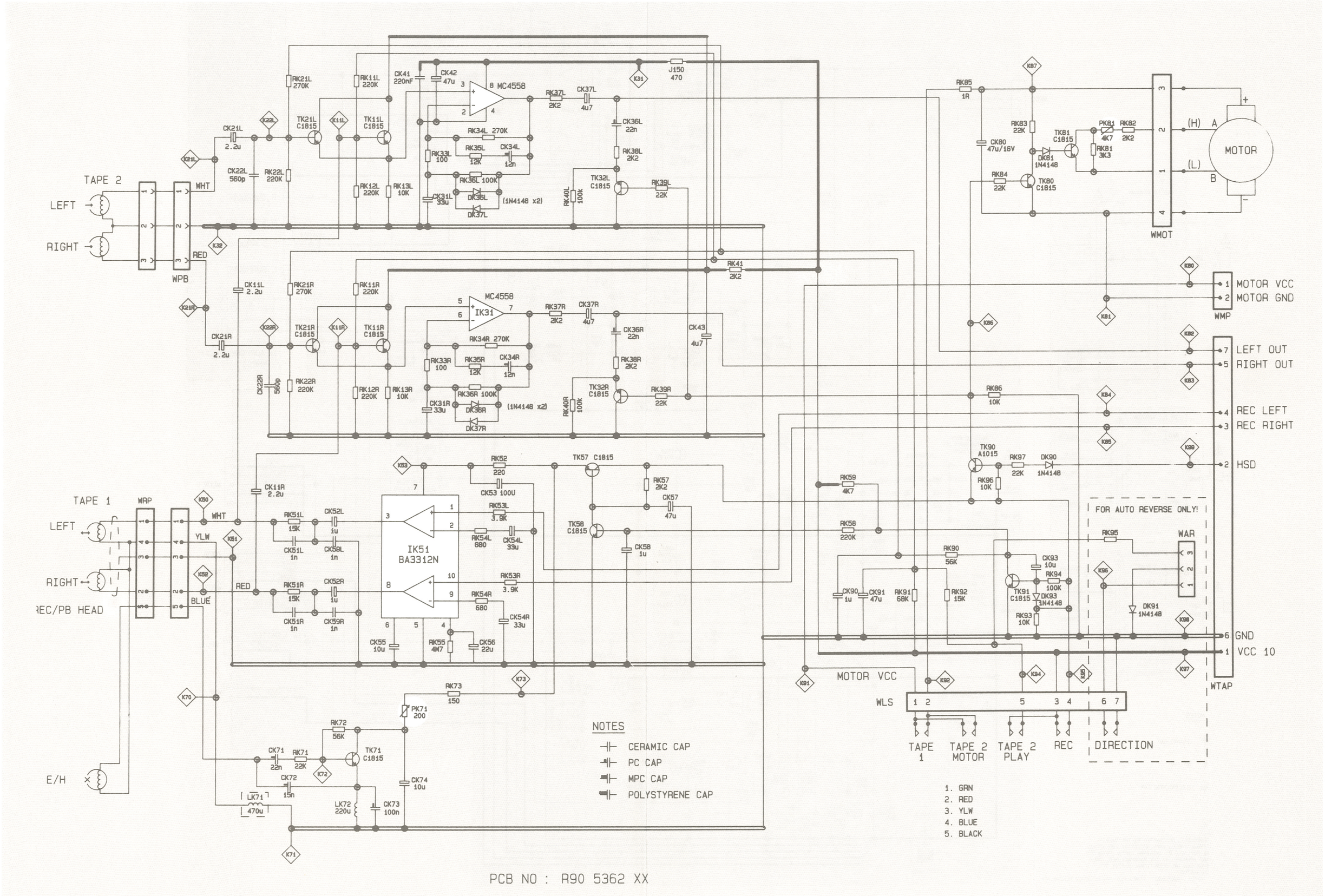

PCB NO : R90 5362 XX

Cassette

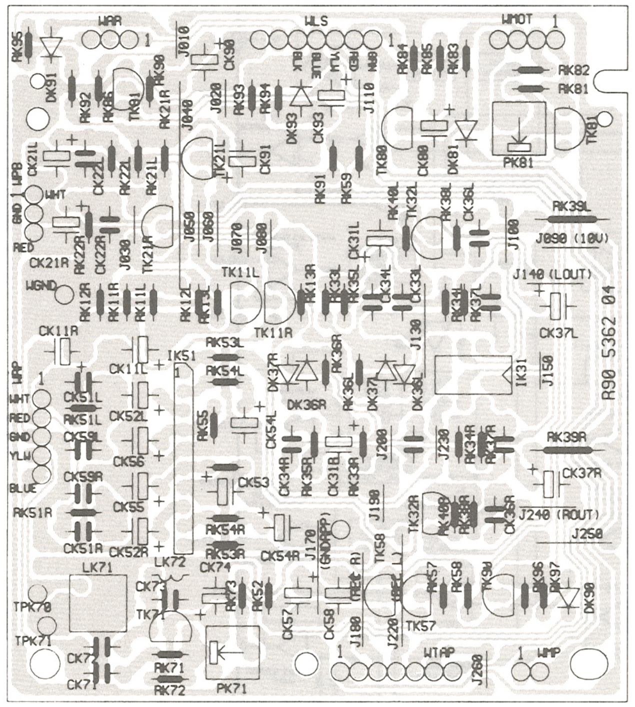
R90 5362 04
J140 (LOUT)
J240 (ROUT)
J890 (10V)

CD

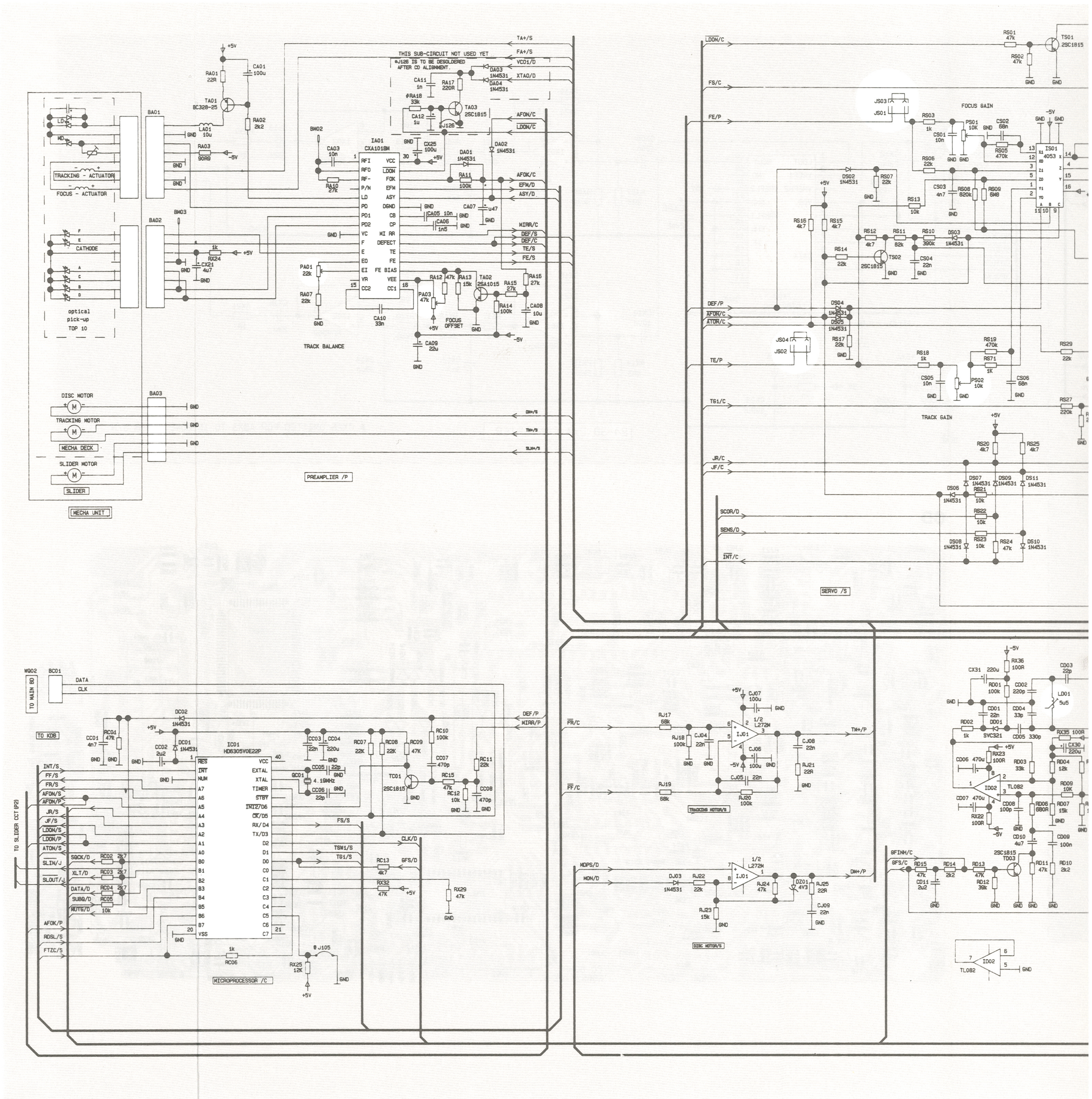
THIS SUB-CIRCUIT NOT USED YET
#J126 IS TO BE DESOLDERED AFTER CD ALIGNMENT.
TRACKING - ACTUATOR
FOCUS - ACTUATOR
CATHODE
optical pick-up TOP 10
DISC MOTOR
TRACKING MOTOR
MECHA DECK
SLIDER MOTOR
SLIDER
MECHA UNIT
CXA1081M
TRACK BALANCE
FOCUS OFFSET
PREAMPLIFIER /P
FOCUS GAIN
TRACK GAIN
SERVO /S
HD6305V0E22P
MICROPROCESSOR /C
TO MAIN BD
TO KDB
TO SLIDER CCT (P2)
TRACKING MOTOR/S
DISC MOTOR/S

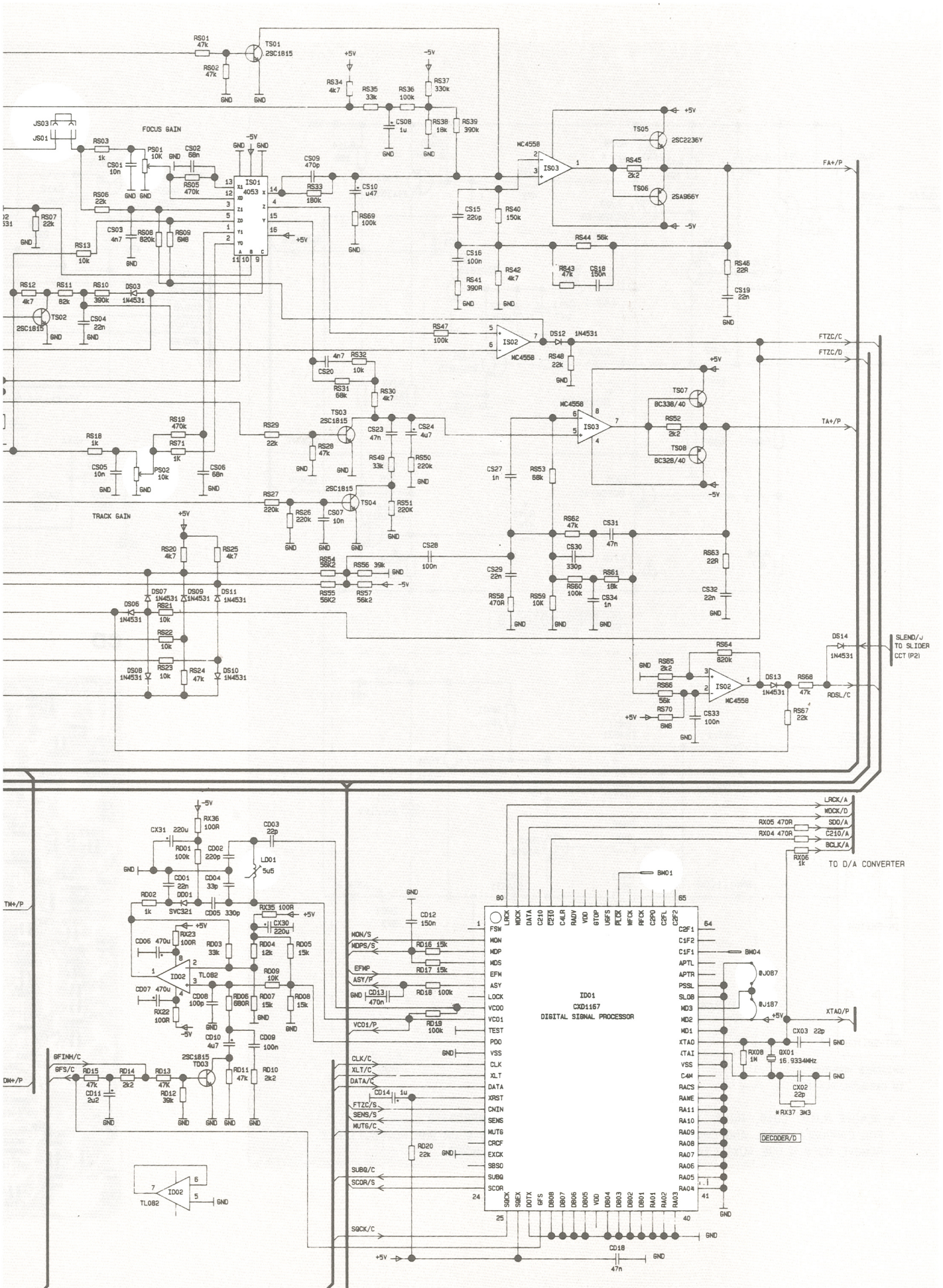
FOCUS GAIN
TRACK GAIN
FA+/P
FTZC/C
FTZC/D
TA+/P
SLEND/J
TO SLIDER
CCT (P2)
RDSL/C
LRCK/A
WDCK/D
SDO/A
C210/A
BCLK/A
TO D/A CONVERTER
XTAO/P
DECODER/D
ID01
CXD1167
DIGITAL SIGNAL PROCESSOR
MON/S
MDPS/S
EFMP
ASY/P
VCO1/P
CLK/C
XLT/C
DATA/C
FTZC/S
SENS/S
MUTG/C
SUBQ/C
SCOR/S
SQCK/C
GFINH/C
GFS/C
TM+/P
DM+/P
TL082
TS01
2SC1815
TS02
2SC1815
TS03
2SC1815
TS04
2SC1815
TS05
2SC2236Y
TS06
2SA966Y
TS07
BC338/40
TS08
BC328/40
TD03
2SC1815
IS01
4053
IS02
MC4558
IS03
MC4558
ID02
TL082
BM01
BM04
QX01
16.9334MHz
RX37 3M3
RX08
1M
CX03 22p
CX02
22p
CD18
47n
CD12
150n
CD14
1u
RD20
22k
RX36
100R
CX31 220u
CD03
22p
LD01
5u5
CD01
22n
CD04
33p
RD02
1k
DD01
SVC321
CD05 330p
RX35 100R
CX30
220u
CD06 470u
RX23
100R
RD03
33k
RD04
12k
RD05
15k
CD07 470u
RX22
100R
CD08
100p
RD06
680R
RD07
15k
RD08
15k
RD09
10K
CD10
4u7
CD09
100n
RD15
47k
RD14
2k2
RD13
47K
RD11
47k
RD10
2k2
CD11
2u2
RD12
39k
RD16 15k
RD17 15k
RD18 100k
RD19
100k
CD13
470n
RX05 470R
RX04 470R
RX06
1k
RS01
47k
RS02
47k
RS34
4k7
RS35
33k
RS36
100k
RS37
330k
CS08
1u
RS38
18k
RS39
390k
JS03
JS01
RS03
1k
PS01
10K
CS02
68n
CS01
10n
RS05
470k
RS06
22k
RS07
22k
CS03
4n7
RS08
820k
RS09
6M8
RS13
10k
RS12
4k7
RS11
82k
RS10
390k
DS03
1N4531
CS04
22n
CS09
470p
RS33
180k
CS10
u47
RS69
100k
CS15
220p
RS40
150k
CS16
100n
RS41
390R
RS42
4k7
RS44 56k
RS43
47k
CS18
150n
RS46
22R
CS19
22n
RS47
100k
DS12
1N4531
RS48
22k
CS20
4n7
RS32
10k
RS31
68k
RS30
4k7
RS29
22k
RS28
47k
CS23
47n
CS24
4u7
RS49
33k
RS50
220k
RS18
1k
RS19
470k
RS71
1K
CS05
10n
PS02
10k
CS06
68n
RS27
220k
RS26
220k
CS07
10n
RS51
220K
CS28
100n
RS20
4k7
RS25
4k7
RS54
56K2
RS56 39k
RS55
56K2
RS57
56k2
DS07
1N4531
DS09
1N4531
DS11
1N4531
DS06
1N4531
RS21
10k
RS22
10k
DS08
1N4531
RS23
10k
RS24
47k
DS10
1N4531
CS27
1n
RS53
68k
RS62
47k
CS31
47n
CS30
330p
CS29
22n
RS58
470R
RS59
10K
RS60
100k
RS61
18k
CS34
1n
RS63
22R
CS32
22n
RS64
820k
RS65
2k2
RS66
56k
RS70
6M8
CS33
100n
DS13
1N4531
RS68
47k
RS67
22k
DS14
1N4531
GND
+5V
-5V

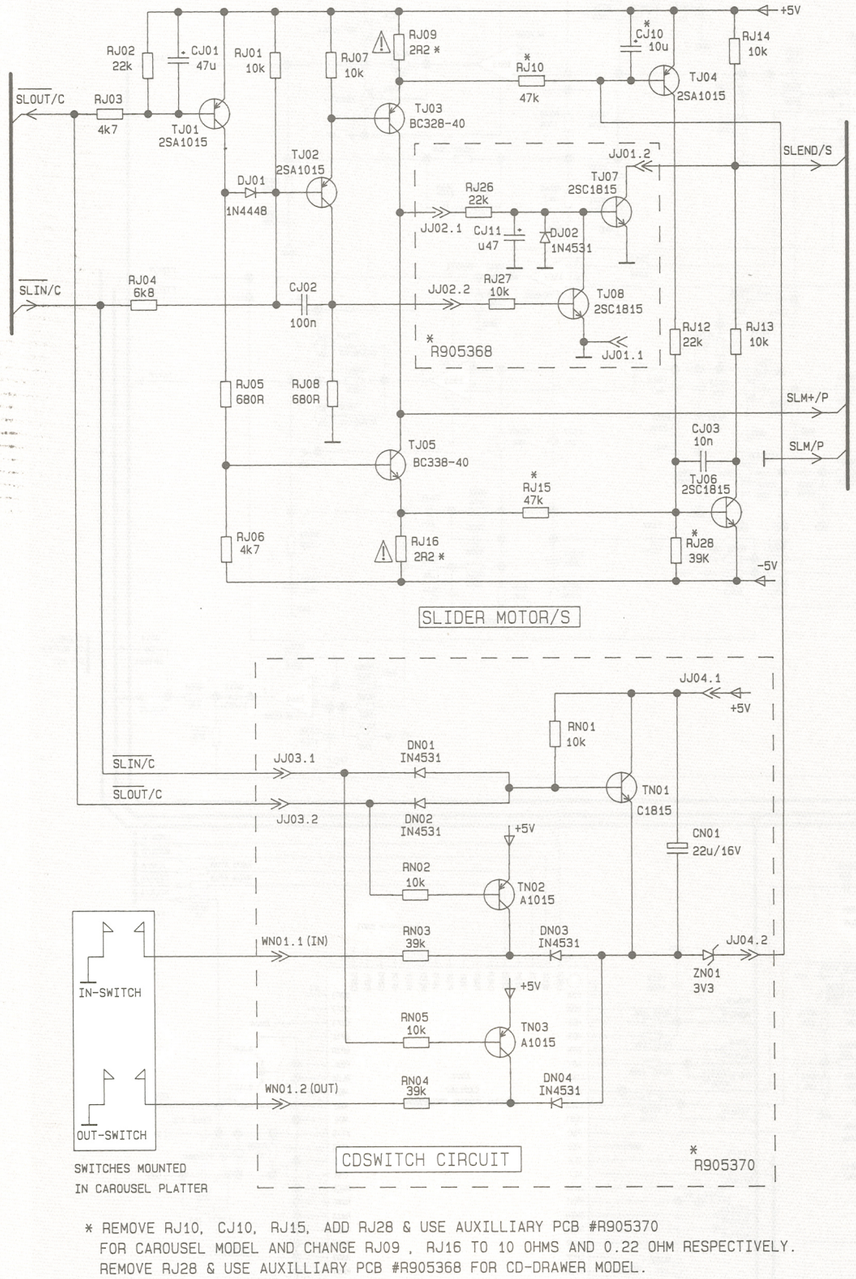

* REMOVE RJ10, CJ10, RJ15, ADD RJ28 & USE AUXILLIARY PCB #R905370
FOR CAROUSEL MODEL AND CHANGE RJ09 , RJ16 TO 10 OHMS AND 0.22 OHM RESPECTIVELY.
REMOVE RJ28 & USE AUXILLIARY PCB #R905368 FOR CD-DRAWER MODEL.

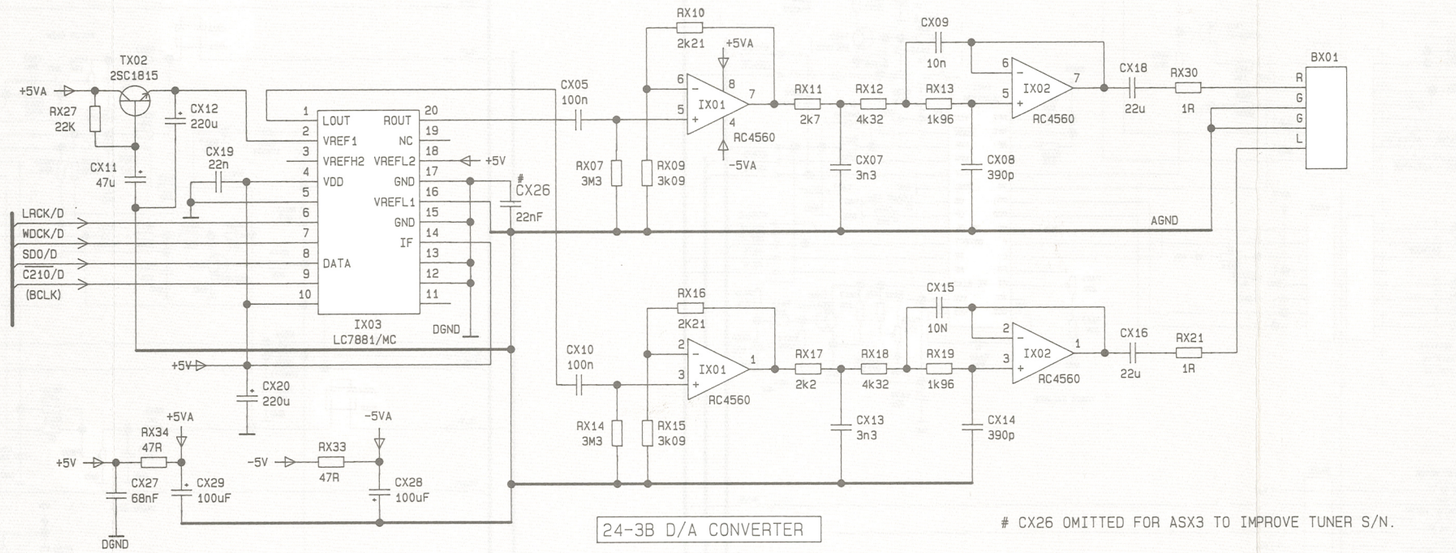

CX26 OMITTED FOR ASX3 TO IMPROVE TUNER S/N.

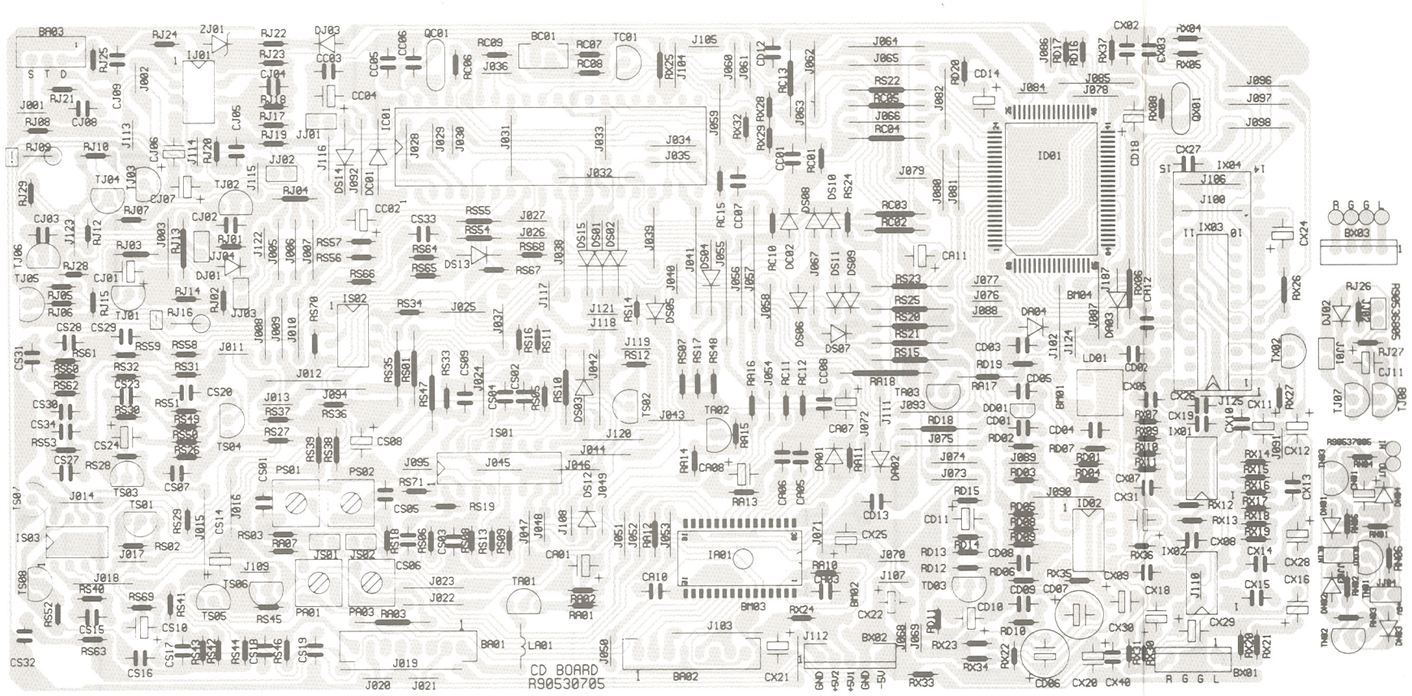

CXA 1081 M

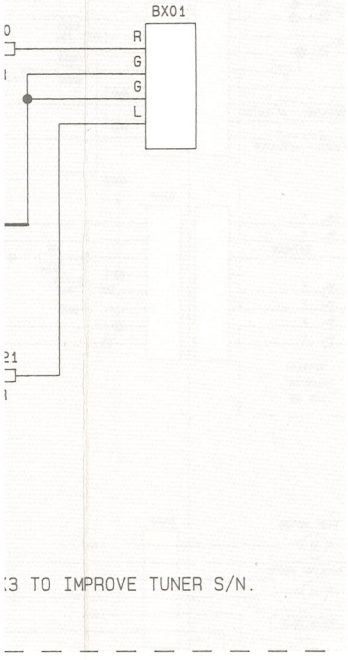
BX01
R
G
G
L
:3 TO IMPROVE TUNER S/N.

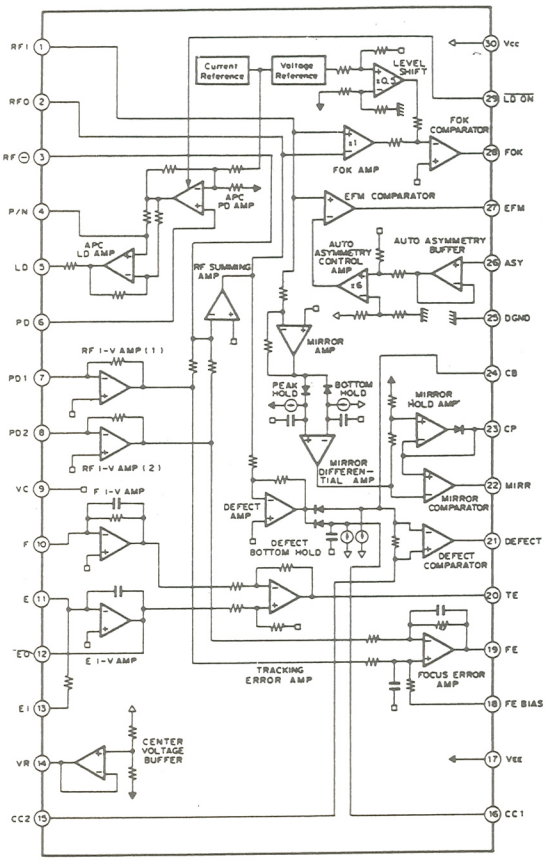
RFI
RFO
RF⊖
P/N
LD
PD
PD1
PD2
VC
F
E
ED
EI
VR
CC2
Vcc
LD ON
FOK
EFM
ASY
DGND
CB
CP
MIRR
DEFECT
TE
FE
FE BIAS
Vee
CC1
Current Reference
Voltage Reference
LEVEL SHIFT
FOK COMPARATOR
FOK AMP
EFM COMPARATOR
APC PD AMP
APC LD AMP
AUTO ASYMMETRY CONTROL AMP
AUTO ASYMMETRY BUFFER
RF SUMMING AMP
MIRROR AMP
RF I-V AMP (1)
RF I-V AMP (2)
PEAK HOLD
BOTTOM HOLD
MIRROR HOLD AMP
MIRROR DIFFEREN-TIAL AMP
MIRROR COMPARATOR
F I-V AMP
DEFECT AMP
DEFECT BOTTOM HOLD
DEFECT COMPARATOR
E I-V AMP
TRACKING ERROR AMP
FOCUS ERROR AMP
CENTER VOLTAGE BUFFER

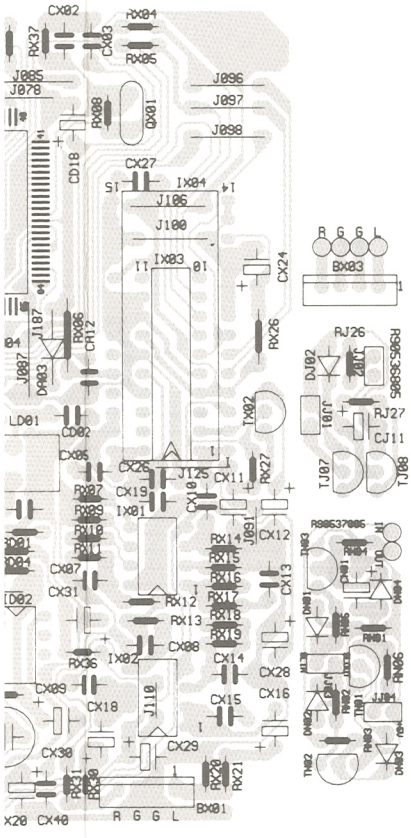
R G G L
BX03
R G G L
BX01

CXA 1081 M

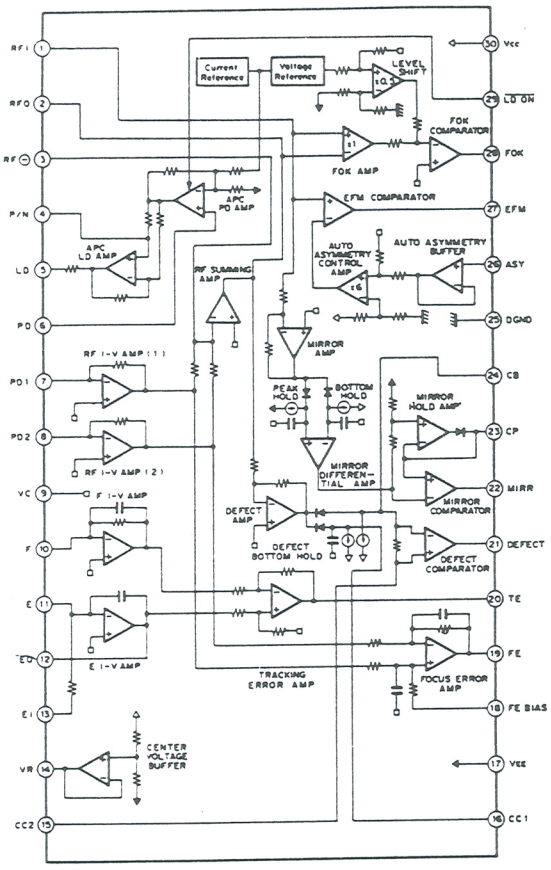
RFI 1
RFO 2
RF⊖ 3
P/N 4
LD 5
PD 6
PD1 7
PD2 8
VC 9
F 10
E 11
⊖E 12
EI 13
VR 14
CC2 15
30 Vcc
29 LD ON
28 FOK
27 EFM
26 ASY
25 DGND
24 CB
23 CP
22 MIRR
21 DEFECT
20 TE
19 FE
18 FE BIAS
17 VEE
16 CC1
Current Reference
Voltage Reference
LEVEL SHIFT
FOK COMPARATOR
FOK AMP
EFM COMPARATOR
APC PD AMP
APC LD AMP
AUTO ASYMMETRY CONTROL AMP
AUTO ASYMMETRY BUFFER
RF SUMMING AMP
MIRROR AMP
RF I-V AMP (1)
RF I-V AMP (2)
PEAK HOLD
BOTTOM HOLD
MIRROR HOLD AMP
MIRROR DIFFEREN-TIAL AMP
MIRROR COMPARATOR
DEFECT AMP
DEFECT BOTTOM HOLD
DEFECT COMPARATOR
F I-V AMP
E I-V AMP
TRACKING ERROR AMP
FOCUS ERROR AMP
CENTER VOLTAGE BUFFER

Bedienteilplatte · Keyboard · Platine de commande

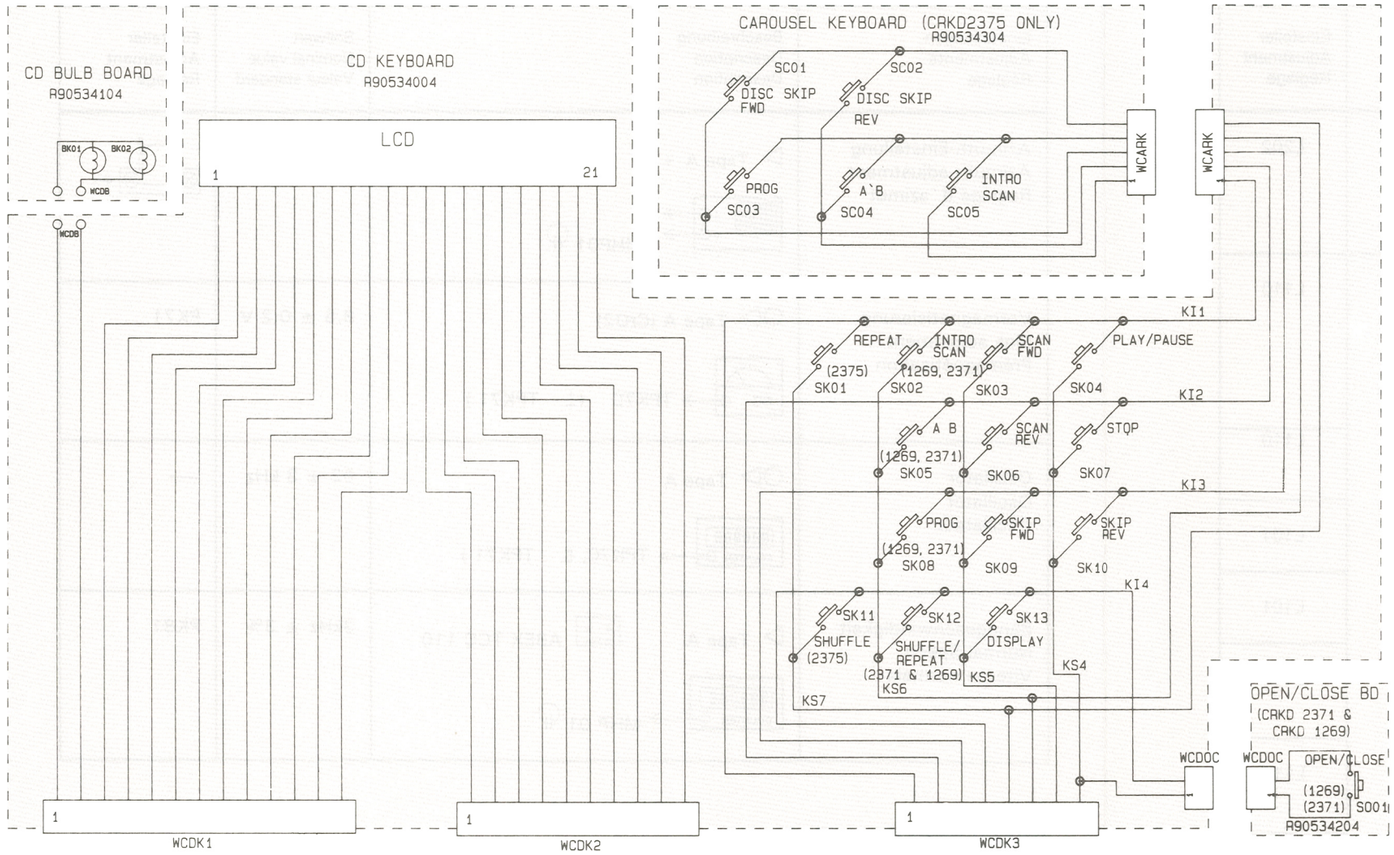

Bedienteilplatte · Keyboard · Platine de commande

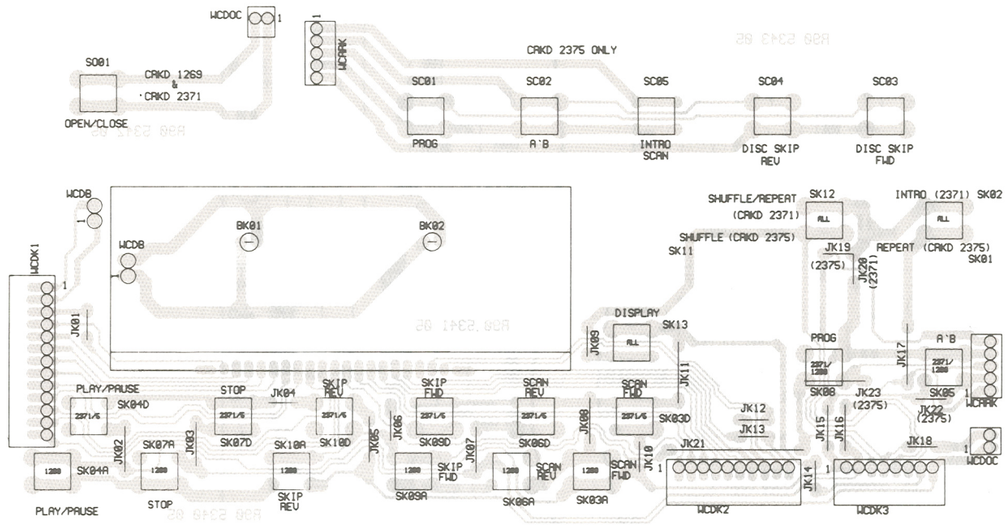

CD-Steuerplatte · CD Control board

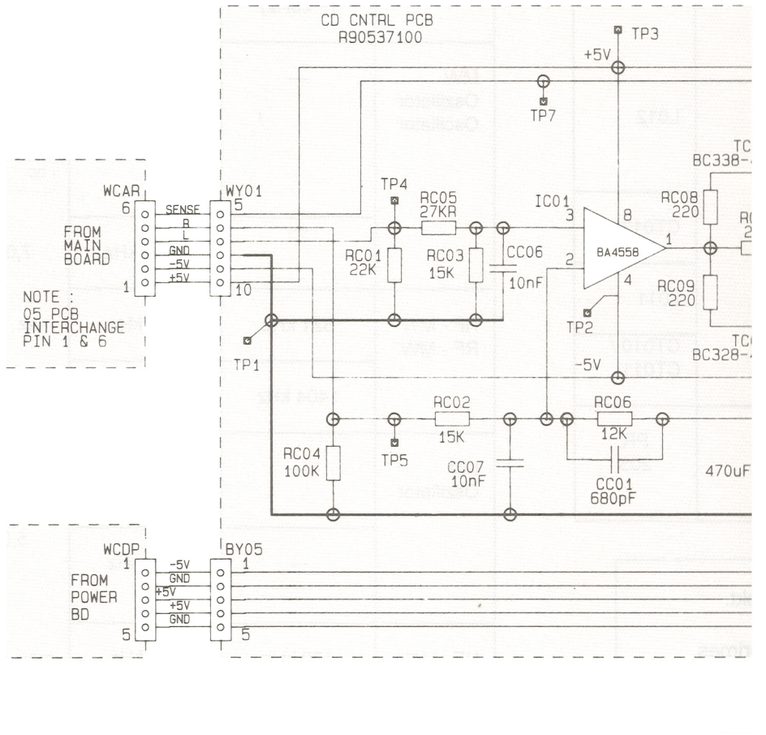

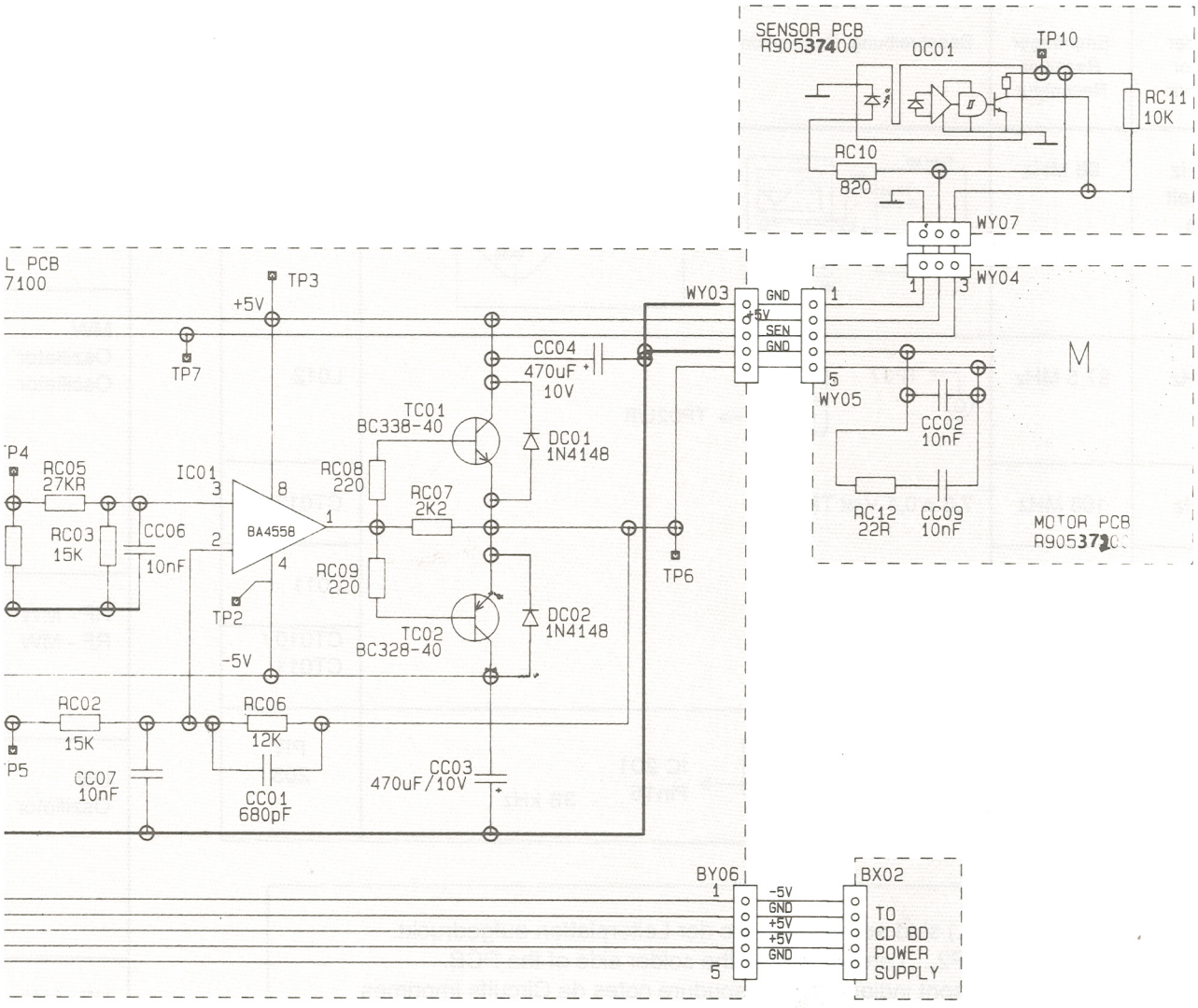
SENSOR PCB
R905374 00
OC01
TP10
RC11
10K
RC10
820
WY07
WY04
WY03
GND
+5V
SEN
GND
WY05
CC02
10nF
RC12
22R
CC09
10nF
MOTOR PCB
R905372 00
L PCB
7100
TP3
+5V
TP7
CC04
470uF
10V
TC01
BC338-40
DC01
1N4148
IC01
RC08
220
RC07
2K2
RC05
27KR
RC03
15K
CC06
10nF
BA4558
RC09
220
TP2
TP6
TC02
BC328-40
DC02
1N4148
-5V
RC02
15K
RC06
12K
CC07
10nF
CC01
680pF
CC03
470uF/10V
BY06
-5V
GND
+5V
+5V
GND
BX02
TO
CD BD
POWER
SUPPLY

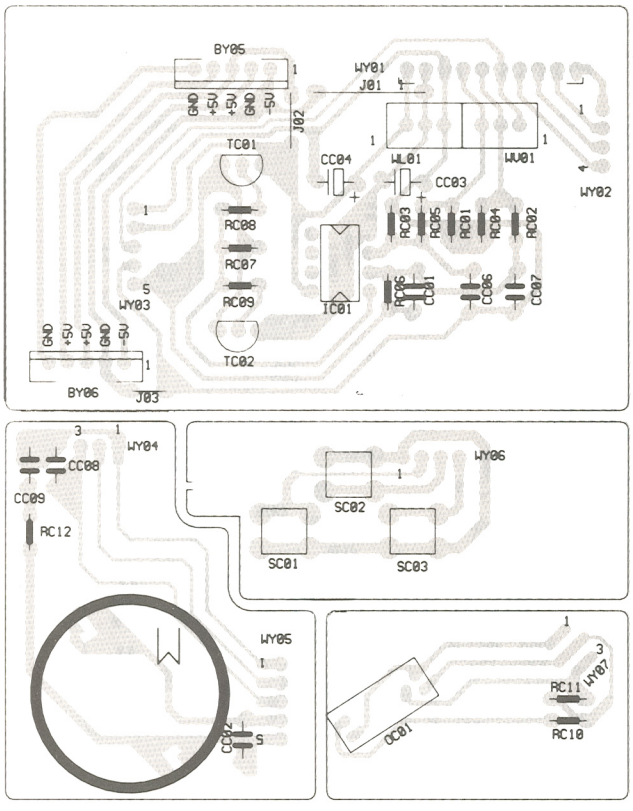
BY05
WY01
J01
J02
TC01
CC04
WL01
CC03
WV01
WY02
RC08
RC07
RC09
WY03
IC01
TC02
BY06
J03
WY04
CC08
CC09
RC12
WY06
SC02
SC01
SC03
WY05
CC05
RC11
WY07
RC10
OC01

FM-Abgleich · Alignment · Alignement

Einstellung Adjustment Réglages	Meßsender Generator Generateur	Empfänger Receiver Recepteur	Beschreibung, Description, Description	Einsteller Adjustment Réglage
ZF	10,7 MHz gewobbelt sweep	98 MHz	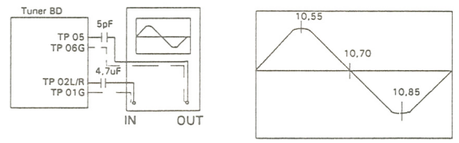	TF2 TF1
Oszillator	87,5 MHz	87,5 MHz		L012
	108 MHz	108 MHz	7,3 ± 0,1 V at TP-10	CT012
HF	90 MHz	90 MHz	max.	L011
	106 MHz	106 MHz	max.	CT010 / CT011
Stereo	98 MHz unmoduliert unmodulated	98 MHz Stereo	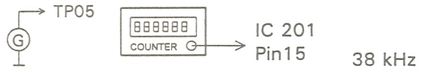	PR 203

Die Testpunkte (TP1, TP2,...) sind auf der Lötseite der Leiterplatten aufgedruckt.
The Testpoints (TP1, TP2,...) are printed on the solder side of the PCB.
Les Points Test (TP1, TP2,...) sont indique sur les soudure cotes de Circuits imprimes

Abgleichpunkte · Adjustment points · Points d'alignement

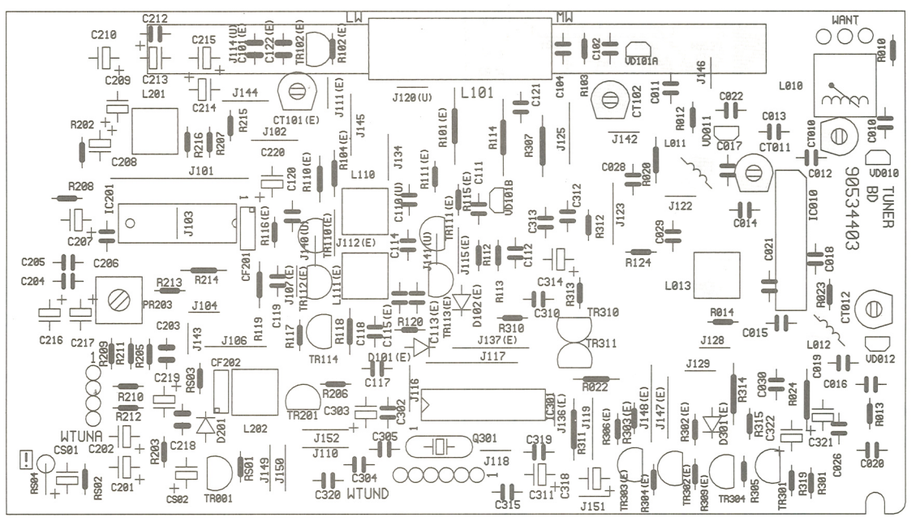

AM-Abgleich · Alignment · Alignement

Einstellung Adjustment Règlages	Meßsender Generator Generateur	Empfänger Receiver Recepteur	Beschreibung, Description, Description	Einsteller Adjustment Règlage
ZF IF	450 kHz gewobbelt sweep, (< 25Hz)	MW	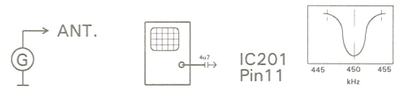	L202
MW Oszillator Oscillator	---	522 kHz	Abstimmspannung: 1,0 ±0,05 V (Tuning-Voltage) 	L110
	---	1710 kHz	7,0 - 9,0 V	L110
HF - MW RF - MW	621 kHz	621 kHz	max. ampl.	L101
	1404 kHz	1404 kHz	max. ampl.	L101
LW Oszillator	---	150 kHz	1,0 ± 0,05 V	L111
	---	283 kHz	5,0 - 7,0V	L111
HF - LW RF - LW	170 kHz	170 kHz	max. ampl.	L101
	270 kHz	270 kHz	max. ampl.	CT101

Abgleichpunkte · Adjustment points · Points d'alignement

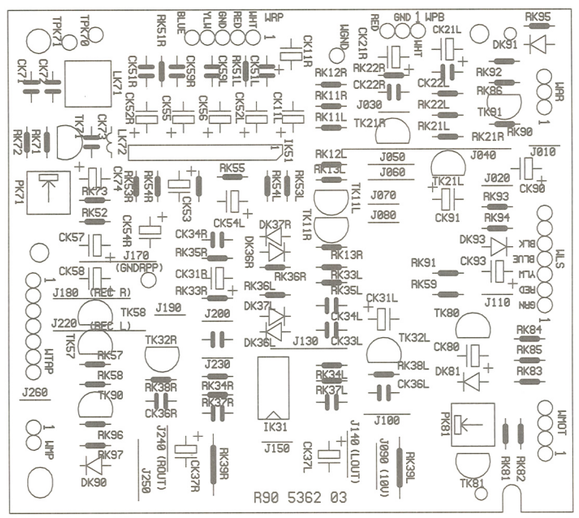

Abgleich-Cassette · Alignment tape · Alignement cassette

Einstellungen Adjustments Réglage	Beschreibung Description Description	Sollwert Nominal value Valeur standard	Einsteller Adjustment Réglage
Azimuth-Einstellung Azimuth adjustment Réglage d´azimut	▷ Tape A + B Azimuth 1 2 → MHP01	Max.	
Vormagnetisierung Bias adjustment Prémagnétisation	○▷ Tape A (CrO2) DC → TPK70 (⊥ TPK71)	8,5 ± 0.2 V	PK71
Oszillator Oscillator Oscillateur	○▷ Tape A 888888 COUNTER → TPK70, (⊥ TPK71)	52 ± 3 kHz	-----
Bandgeschwindigkeit Normal Speed Vitesse normale	▷ Tape A ABEX TCC 110 888888 COUNTER → MHP 01	3kHz ± 3%	PK81

Abgleichpunkte CD-Spieler

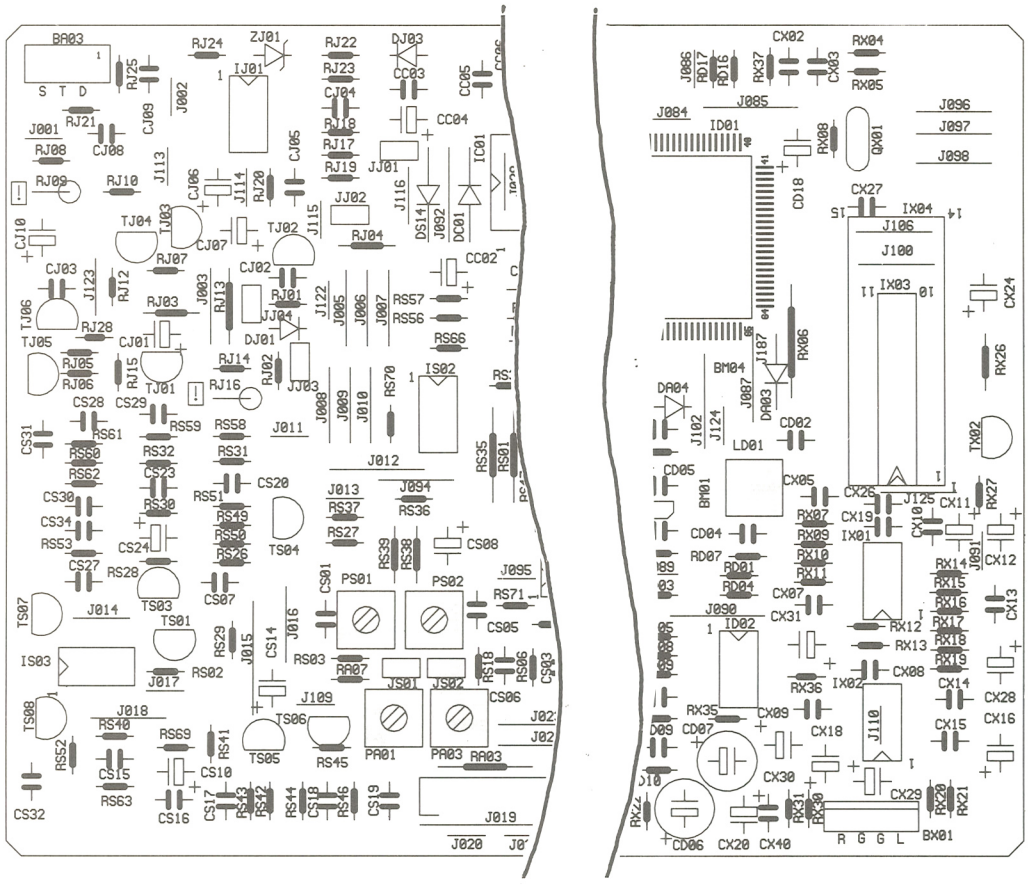

Abgleich CD-Spieler · Alignment CD · Alignement CD

Abgleich Adjustments Règlage	Beschreibung Description Description	Einsteller Adjustment Règlage	Sollwert Nominal value Valeur standart
PLL (VCO)	Stop, 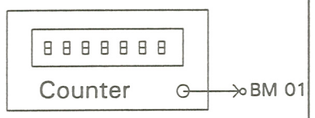	LD 01	4,321MHz ± 6 kHz
Focus Offset	Play, 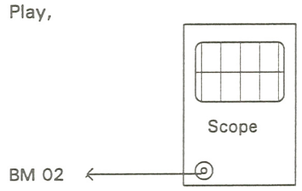 (Phillips 5A Track 1)	PA 03	Maximal AC-Pegel
Tracking Offset	Play TNO 1, 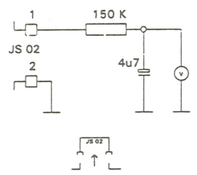	PA 01	0 V , ± 20 mV DC
Focus Gain	Play, (Philips 5A Track 1) 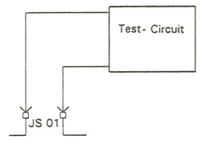	PS 01	(AC-Millivoltmeter) U1 = U2 G = 550 Hz 300mV pp
Tracking Gain	CD-Spieler auf Play (Phillips 5A Track 1) 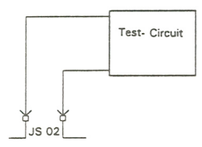	PS 02	U1 = U2 G = 1,3 kHz / 300mV pp (AC - Millivoltmeter)

Cassette

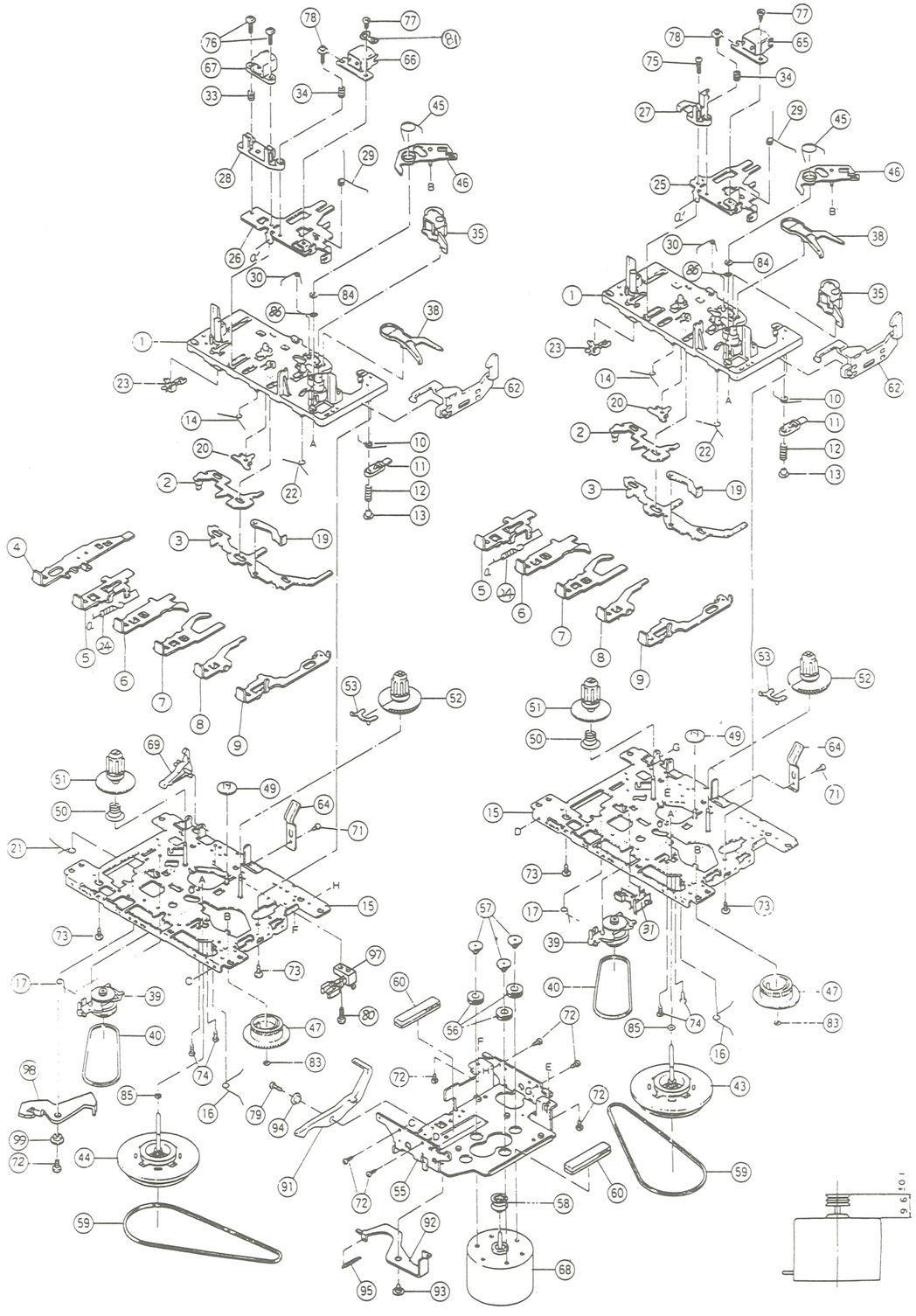

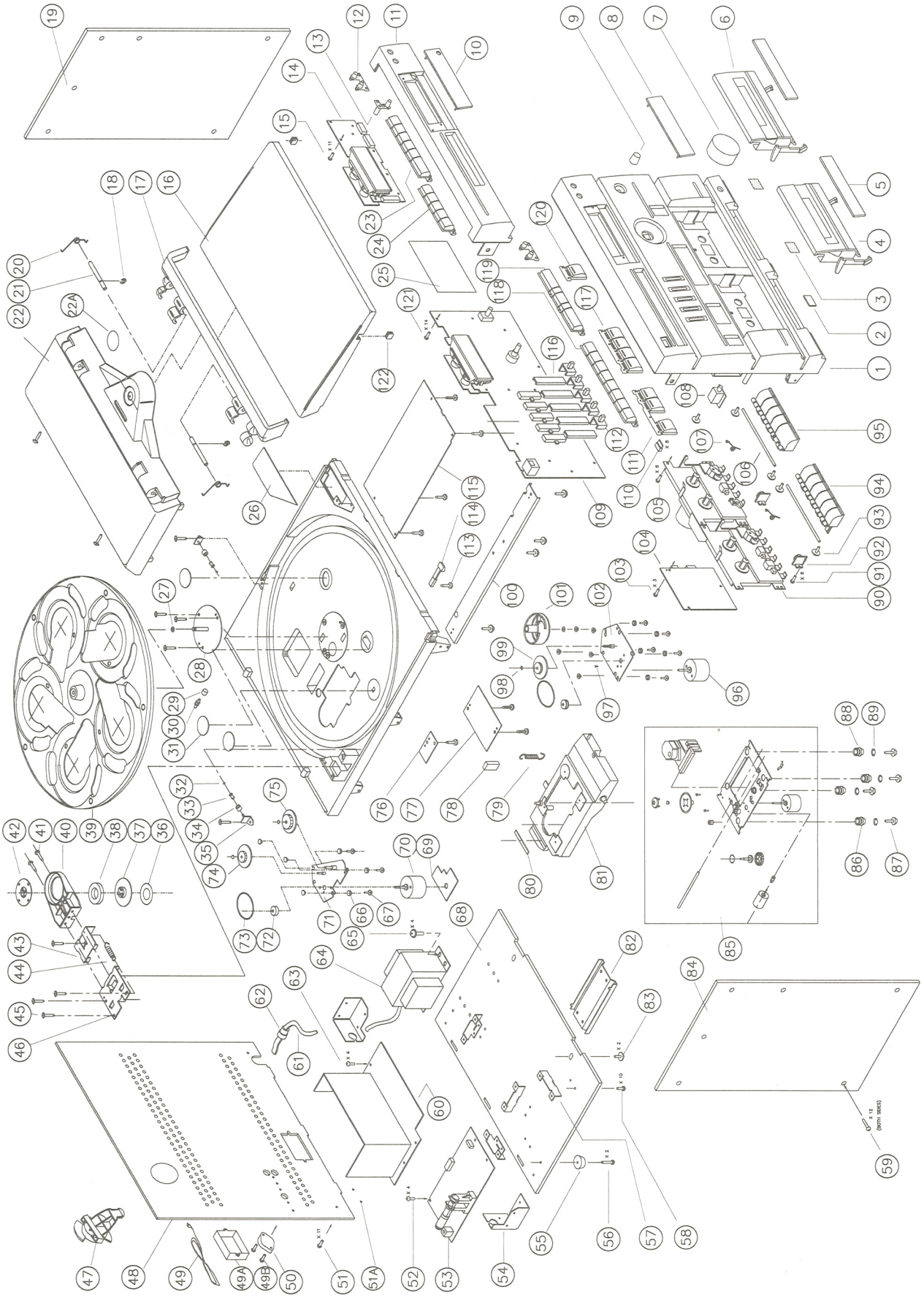

Wichtig: Bei Ersatzteilbestellungen bitte **unbedingt** die **Bestellnummer** angeben!
N. B.: When demanding Space Parts it is **absolutely necessary** to quote the **Part Number.**
Important: Lors d'une commande de pièces de rechange, prière d'indiquer **en tout cas** le **numéro de la pièce** chiffres.

Pos.	Art.-Nr. Part No. No. articolo	Bezeichnung	Part
		ALLGEMEINE TEILE:	**GENERAL PARTS:**
		SERVICE-UNTERLAGEN:	**SERVICE INFORMATIONS:**
BDA	101.602.20	Bedienungsanleitung	Instruction booklet
SI	101.511.70	Service Information Compact 2500CD	Service information
		ZUBEHÖR /BEIPACK:	**ACCESSORIES:**
	101.602.40	Lautsprecherbox, kpl.	Speaker box, cpl.
RC	101.602.30	FERNBEDIENUNG (IR)	REMOTE CONTROL UNIT
		MECHANISCHE TEILE:	**MECHANICAL PARTS:**
		CHASSIS UND GEHÄUSETEILE:	**CHASSIS AND CABINET PARTS:**
1	101.595.20	Frontplatte	Front panel
4	101.595.50	Cassettenklappe, links	Door cassette (L)
5	339.172.218	Fenster, Cassettenklappe	Cassette door filter
6	101.595.60	Cassettenklappe, rechts	Door cassette (R)
7	101.595.70	Knopf, Lautstärke	Knob, volume
8	339.232.223	Fenster, FILTER TUNER	Window
9	101.596.80	Knopf, Balance	Knob, balance
10	339.232.222	Fenster, DISPLAY CD	Window
11	101.597.30	Frontplatte CD	Front panel CD
16	101.610.60	Abdeckung	Cover
17	101.610.50	Scharnier, kpl.	Hinge assy
20	101.610.70	Feder	Spring
22	101.610.10	Abdeckung	Cover
47	101.597.60	Halter	Holder
55	490.007.4417	Fuß	Foot
61	339.480.310 S	Netzanschlussleitung (LÖTENDE)	Power cord
64	339.312.218 S	Netztransformator, 91T5077A	Power transformer
94	101.595.30	Tastenknopf, Cass	Push knob, Cass
95	101.595.40	Tastenknopf, Cass-(P)	Push knob, Cass-(P)
108/MHP01	339.540.905	Buchse, Kopfhörer	Headphone socket
114	101.627.50	Federschalter	Leaf switch
		CASSETTENLAUFWERK:	**MECHANISM CHASSIS:**
23	339.442.247	Mikroschalter	Micro switch
31	339.442.248	MICROSCHALTER	LEAT SWITCH
35	339.755.902	Andruckrolle, kpl.	Pinch roller, cpl.
39	339.760.914	Rutschkupplung	RF clutch
40	339.730.907	Antriebsriemen (RF)	Belt
43	339.710.903	Schwungrad	Flywheel
44	339.710.904	Schwungrad	Flywheel
51	339.740.223	ABWICKELBANDTELLER	Supply reel, cpl.
52	339.740.224	AUFWICKELBANDTELLER	Take up reel, cpl.
58	339.735.903	MOTORROLLE	Motor pulley
59	339.730.119	Antriebsriemen	Belt
64	136TX3512	Anschlagfeder, CASSETTE	Spring
65	339.350.118	A/W KOPF	R/P head
66	339.350.118	A/W KOPF	R/P head
67	339.355.255	LOESCHKOPF	Erase head
68	339.300.015	Motor	Motor
69	339.765.916	Sperrhebel, Aufnahme	Record safety lever
92	339.807.201	Dämpferzahnrad	Gear damper
97	339.442.249	MICROSCHALTER	LEAT SWITCH
107	339.912.201	Drehfeder	Spring torsion
		CD-LAUFWERK, KPL.	**CD-MECHANISM ASSY**
-	101.830.80	Basisträger CD-Karussell, kpl.	Base carrousel CD asy
-	339.338.265	LASER-ABTASTER, KPL.	Laser unit mechanismus assy
-	339.301.209	Motor, DISC CD-003M	Motor
-	339.301.705	Motor	Motor
36	339.871.212	Dämpfer, CD-HALTER	Damper
70	339.301.210	Motor, DC	DC Motor
72	339.736.712	Rad 2	Belt wheel 2
73	101.604.50	Riemenscheibe	Pulley
74	101.610.30	Schnurrolle	Pulley
75	101.610.40	Zahnrad, kpl.	Gear assy
79	101.602.90	Feder	Spring
81	101.611.20	Halterung	Bracket assy
85	349.338.029	CD LAUFWERK, CD004WD, KPL.	CD MECHANISM ASSY
96	101.611.00	Motor	Motor
99	101.611.10	Kurvenscheibe	Pulley cam
101	101.603.10	Nockenzahnrad	Cam gear
DS01	309.325.927	Diode, 1N4148	Diode, 1N4148
FS01,02	309.627.913 S	500mAT, Sicherung	500mAT, Fuse
FS03	467.188 S	G.-Schmelzeinsatz, T 2,5A III	2,5AT, Glass fuse

Pos.	Art.-Nr. Part No. No. articolo	Bezeichnung	Part
		ELEKTRISCHE TEILE:	**ELECTRICAL PARTS:**
109/MAIN		**HAUPTLEITERPLATTE**	**P.C.B., MAIN**
IC01	101.602.50	MN15P8855-003, IC	MN15P8855-003, IC
IC02	339.577.346	74LS157, IC	74LS157, IC
ICSR0	339.575.951	IC, MC14094BCP	IC, MC14094BCP
ICSR1	339.575.951	IC, MC14094BCP	IC, MC14094BCP
ICSR2	339.575.951	IC, MC14094BCP	IC, MC14094BCP
IE01	339.576.310	BA3822LS, IC	BA3822LS, IC
TC01,06	339.556.482	Transistor, 2SA1015-GR	Transistor, 2SA1015-GR
TC02-05,07	339.556.299	2SC1815GR TRANS.	Transistor, 2SC1815-GR
TC50,51,54	339.556.299	2SC1815GR TRANS.	Transistor, 2SC1815-GR
TC53,55,59	339.556.482	Transistor, 2SA1015-GR	Transistor, 2SA1015-GR
TC60	339.556.299	2SC1815GR TRANS.	Transistor, 2SC1815-GR
TC61	339.556.377	Transistor, 2SA966	Transistor, 2SA966
TC62,64-66	339.556.299	2SC1815GR TRANS.	Transistor, 2SC1815-GR
TC63	339.556.482	Transistor, 2SA1015-GR	Transistor, 2SA1015-GR
TF01-03L,R	339.556.299	2SC1815GR TRANS.	Transistor, 2SC1815-GR
TV01L,R	339.556.299	2SC1815GR TRANS.	Transistor, 2SC1815-GR
TV02-06L,R	339.555.425	2SC1815BL TRANS	2SC1815-BL, Transistor
TV07,10,31	339.556.299	2SC1815GR TRANS.	Transistor, 2SC1815-GR
TV09L,R	339.555.102	2SC2001M, Transistor	2SC2001M, Transistor
DC01,02	309.325.927	Diode, 1N4148	Diode, 1N4148
DC50	248.145	Diode, 1SS106, SCHOTTKY	Diode, 1SS106, SCHOTTKY
DC51-54	339.527.320	LTL307GE, Diode, grün LED	LTL307GE, Diode, green LED
DC61-64	339.527.320	LTL307GE, Diode, grün LED	LTL307GE, Diode, green LED
DC65-68	309.325.927	Diode, 1N4148	Diode, 1N4148
DF01-04L,R	309.325.927	Diode, 1N4148	Diode, 1N4148
DV01,02L,R	309.325.927	Diode, 1N4148	Diode, 1N4148
QC01	339.344.252	2MHz, Quarz	2MHz, Crystal
PE01-05	339.502.252	50KOHM 2X, Schieberegler	50KOHM 2X, Pot. slide
VR01	339.502.253	50KOHM, Potentiometer	50KOHM, Potentiometer
RC01	339.538.122 S	SICHERHEITSWIDERSTAND. 2,2OHM, 0,3W	Fusible resistor, 2,2Ω, 0,3W
BC03	101.610.80	Akku, 3V6, Ni-Cd	Battery, 3V6, Ni-Cd
LCD01	101.610.90	LEITERPLATTE, LCD	P.C.B., LCD
MEN01	339.442.045	Druckschalter, ENCODER	Push switch
MRC01	339.334.301	INFRA-VORVERSTÄRKER	IR-RECEIVER
SW01-15	339.442.029	Mikroschalter	Micro switch
SW17-21	339.442.029	Mikroschalter	Micro switch
53		**TUNER CHAS-EUR, LEITERPLATTE**	**TUNER, P.C.B.**
IC010	339.575.869	TA7358P, IC	TA7358P, IC
IC201	339.577.350	AN7238 IC	AN7238 IC
TR001	248.165	Transistor, 2SC2236-Y	Transistor, 2SC2236-Y
TR102	248.163	Transistor, 2SC1923-0	Transistor, 2SC1923-0
TR110-113	339.556.299	2SC1815GR TRANS.	Transistor, 2SC1815-GR
TR114	248.163	Transistor, 2SC1923-0	Transistor, 2SC1923-0
TR201	339.556.482	Transistor, 2SA1015-GR	Transistor, 2SA1015-GR
TR301-304	339.556.482	Transistor, 2SA1015-GR	Transistor, 2SA1015-GR
TR310,311	339.556.299	2SC1815GR TRANS.	Transistor, 2SC1815-GR
TS02,06	339.556.377	Transistor, 2SA966	Transistor, 2SA966
TS03,05,07	339.556.299	2SC1815GR TRANS.	Transistor, 2SC1815-GR
TS07	309.001.231	BC338/40TRANS.	Transistor, BC338-40
D101,102	309.325.927	Diode, 1N4148	Diode, 1N4148
D201,301	309.325.927	Diode, 1N4148	Diode, 1N4148
VD010-012	339.527.224	Diode, SVC201	Diode, SVC201
VD101A	339.527.225	Diode, 36Z	Diode, 36Z
Q301	339.344.038	Quarz-Resonator 7,2MHz	Crystal resonator 7,2MHz
CF201	339.367.031	Keramikfilter, 10,7MHz	Ceramic filter, 10,7MHz
CF202	339.344.802	Keramikfilter, 450kHz	Ceramic filter, 450kHz
PR203	339.502.908	Potentiometer, 4,7kΩ	Potentiometer, 4,7kΩ
RS04	253.724 S	Sicherheitswiderstand, 4,7Ω, 0,3W	Fusible resistor, 4,7Ω, 0,3W
CT010-012	339.590.269	Trimmer, 3-10pF	Trimmer capacitor, 3-10pF
CT101,102	339.590.273	TRIMMKO	Trimmer, 10-30pF
L111	339.347.802	LW Oszillator Spule	LW Oscillator coil
CONTROL		**CD CNTRL DSX5 DISPLAY, KPL.**	**CD CNTRL DSX5 DISPLAY ASSY**
14/CNTRL	101.597.50	CD CNTRL DSX5 DISPLAY, KPL.	CD CNTRL DSX5 DISPLAY ASSY
IC01	339.576.161	L272M, IC	IC, L272M
SK02-10	339.442.029	Mikroschalter	Micro switch
SK12,13	339.442.029	Mikroschalter	Micro switch
104		**CASSETTENSTEUERUNG, LTP**	**CASS-DSX, CONTROL P.C.B.**
IK31	253.349	IC, 4558	IC, 4558
IK51	339.576.668	BA3312N, IC	BA3312N, IC

Fax 0511 418-12 60

Wichtig: Bei Ersatzteilbestellungen bitte **unbedingt** die **Bestellnummer** angeben!
N. B.: When demanding Space Parts it is **absolutely necessary** to quote the **Part Number.**
Important: Lors d'une commande de pièces de rechange, prière d'indiquer **en tout cas** le **numéro de la pièce** chiffres.

Pos.	Art.-Nr. Part No. No. articolo	Bezeichnung	Part
TK11,21,32	339.556.299	2SC1815GR TRANS.	Transistor, 2SC1815-GR
TK57,58,71	339.556.299	2SC1815GR TRANS.	Transistor, 2SC1815-GR
TK80,81,91	339.556.299	2SC1815GR TRANS.	Transistor, 2SC1815-GR
TK90	339.556.482	Transistor, 2SA1015-GR	Transistor, 2SA1015-GR
DK36,37R,L	309.325.927	Diode, 1N4148	Diode, 1N4148
DK81,90,93	309.325.927	Diode, 1N4148	Diode, 1N4148
PK71	101.602.70	Potentiometer	Potentiometer
PK81	247.303	Potentiometer, 4,7kΩ	Potentiometer, 4,7kΩ
115		**CD CONTROL CHASSIS-2375, LEITERPLATTE**	**CD CNTRL CHAS-2375, P.C.B.**
IA01	339.577.274	CAX1081H IC	IC, CAX1081H
IC01	339.577.347	HD6305VOE22P, IC	HD6305VOE22P, IC
ID01	339.577.081	IC, CXD1167	IC, CXD1167
ID02	253.738	IC, 082CDP	IC, 082CDP
IJ01	339.576.161	L272M IC	IC, L272M
IS01	276TX5002	IC, HCF4053BEY	IC, HCF4053BEY
IS02,03	253.349	IC, 4558	IC, 4558
IX01,02	339.577.348	NJM4560D IC	IC, NJM4560D
IX03	339.577.352	LC7881 IC	IC, LC7881
TA01	465.957	Transistor, BC328-25	Transistor, BC328-25
TA02	339.556.482	Transistor, 2SA1015-GR	Transistor, 2SA1015-GR
TC01	339.556.299	2SC1815GR TRANS.	Transistor, 2SC1815-GR
TD03	339.556.299	2SC1815GR TRANS.	Transistor, 2SC1815-GR
TJ01,02	339.556.482	Transistor, 2SA1015-GR	Transistor, 2SA1015-GR
TJ03	309.001.332	BC328-40 TRANS.	Transistor, BC328-40
TJ04	339.556.482	Transistor, 2SA1015-GR	Transistor, 2SA1015-GR
TJ05	309.001.231	BC338/40TRANS.	Transistor, BC338-40
TJ06	339.556.299	2SC1815GR TRANS.	Transistor, 2SC1815-GR
TS01-04	339.556.299	2SC1815GR TRANS.	Transistor, 2SC1815-GR
TS05	248.165	Transistor, 2SC2236-Y	Transistor, 2SC2236-Y
TS06	339.556.377	Transistor, 2SA966	Transistor, 2SA966
TS07	309.001.231	BC338/40TRANS.	Transistor, BC338-40
TS08	309.001.332	BC328-40 TRANS.	Transistor, BC328-40
TX02	309.001.332	BC328-40 TRANS.	Transistor, BC328-40
0C01	101.611.30	LG0701 Diode Sens.	LG0701 Diode
DA01,02	339.527.045	Diode, 1N4531	Diode, 1N4531
DC01,02	339.527.045	Diode, 1N4531	Diode, 1N4531
DD01	273TX1072	Diode, SVC321C	Diode, SVC321C
DJ01,03	339.527.045	Diode, 1N4531	Diode, 1N4531
DS02-14	339.527.045	Diode, 1N4531	Diode, 1N4531
ZJ01	339.527.321	4V3J 0,5W Z-DIODE	Diode, 4V3J 0,5W ZENER
QC01	339.344.822	Keramikfilter, 4,194MHz	Ceramic filter, 4,194MHz
QX01	339.344.800	Quarz, 16,9344MHz	Crystal, 16,9344MHz
LD01	339.367.903	Filter, 7x7 (5,5µH)	Filter, 7x7
PA01	339.502.251	22KOHM, Potentiometer	22KOHM, Potentiometer
PA03	339.502.704	Potentiometer, 47kΩ	Potentiometer, 47kΩ
PS01,02	339.507.111	Potentiometer, 10kΩ	Potentiometer, 10kΩ
RJ09	339.537.716 S	10R WIDERSTAND 0,3W	Fusible resistor, 10Ω, 0,3W, 5%
RJ16	101.611.40 S	0,22Ω Sicherungswiderstand	0,22Ω fusible resistor

Pos.	Art.-Nr. Part No. No. articolo	Bezeichnung	Part
60		**NETZTEIL (CHAS-2375), LTP.**	**POWER (CHAS-2375), P.C.B.**
IA01	339.575.674	TDA2009S, IC	TDA2009S, IC
IA61	253.349	IC, 4558	IC, 4558
IC301	339.576.545	IC, LM7001	IC, LM7001
IS01,51	253.349	IC, 4558	IC, 4558
TA01L,R	465.957	Transistor, BC328-25	Transistor, BC328-25
TS01	309.006.708	Transistor, TIP42A	Transistor, TIP42A
TS02,06	339.556.377	Transistor, 2SA966	Transistor, 2SA966
TS03,05,07	339.556.299	2SC1815GR TRANS.	Transistor, 2SC1815-GR
TS04	339.555.127	BD233 TRANS.PP 300	Transistor, BD233
TS08	248.165	Transistor, 2SC2236-Y	Transistor, 2SC2236-Y
TS09,51	339.556.299	2SC1815GR TRANS.	Transistor, 2SC1815-GR
TS52	339.556.026	Transistor, BD135	Transistor, BD135
TS53	339.556.036	Transistor, BD136	Transistor, BD136
TS54,55	248.165	Transistor, 2SC2236-Y	Transistor, 2SC2236-Y
DS01-04	309.325.149	Diode, BY296	Diode, BY296
DS05	248.209	Diode, 5V6J 0,5W ZENER	Diode, 5V6J 0,5W ZENER
DS06	101.817.60	ZNR13, J, 0,5W, Diode ZENER	ZNR13, J, 0,5W, Diode ZENER
DS07	309.325.927	Diode, 1N4148	Diode, 1N4148
DS08,09	248.209	Diode, 5V6J 0,5W ZENER	Diode, 5V6J 0,5W ZENER
DS51-54	339.525.013	Diode, 1N4001	Diode, 1N4001
		LTP.. : CAROUSEL CNTRL ASY	**P.C.B.. : CAROUSEL CNTRL ASY**
SC01-05	339.442.029	Mikroschalter	Micro switch
		LTP.. : AUX JACK ASY	**P.C.B.. : AUX JACK ASY**
MAX01	339.420.814	CINCHBUCHSE,2-FACH	Cinch socket
		LTP.. : BACK LIGHT ASY	**P.C.B.. : BACK LIGHT ASY**
BK01,02	339.560.802	Lampe, 12V 50mA	Lamp, 12V 50mA
		LTP.. : MAIN BACK LIGHT ASY	**P.C.B.. : MAIN BACK LIGHT ASY**
BC01,02	339.560.802	Lampe, 12V 50mA	Lamp, 12V 50mA
		LTP.. : CD SWITCH CCT ASY	**P.C.B.. : CD SWITCH CCT ASY**
TN01	339.556.299	2SC1815GR TRANS.	Transistor, 2SC1815-GR
TN02,03	339.556.482	Transistor, 2SA1015-GR	Transistor, 2SA1015-GR
DN01-04	339.527.045	Diode, 1N4531	Diode, 1N4531
ZN01	339.529.971	BZX83C 3V3 Z-DIODE	Diode, BZX83C3V3 ZENER

Diese Angaben und Hinweise sind ausschließlich für den Service des Fachhändlers bestimmt · Änderungen vorbehalten · Sämtliche Urheberrechte an diesen Texten und Zeichnungen stehen uns zu. Nachdrucke, Vervielfältigung – auch auszugsweise – nur mit unserer vorherigen Zustimmung zulässig. Alle Rechte vorbehalten. Questi dati e queste istruziono sono riservati ai tecnici del servizio assistenza · Con riserva di modifiche · These instructions are for service dealers only · Subject to modification

Änderungen vorbehalten · Subject to change · Modifications réservées · Con riserva di modifiche · Reservado derecho de modificacion

Thomson Consumer Electronics GmbH & Co. oHG
– Service –
Göttinger Chaussee 76
30453 Hannover (Germany)

Tocom Nr. 101.511.70 9311 / Docu